AD648007

REPORT NUMBER 133

NOVEMBER 1963

STRESS REPORT
NOSE LANDING GEAR ASSEMBLY

ARCHIVE COPY

DDC AVAILABILITY NOTICES

1. Distribution of this document is unlimited.

2. This document is subject to special export controls and each transmittal to foreign governments or foreign nationals may be made only with prior approval of US Army Aviation Materiel Laboratories, Fort Eustis, Virginia 23604.

3. In addition to security requirements which must be met, this document is subject to special export controls and each transmittal to foreign governments or foreign nationals may be made only with prior approval of USAAVLABS, Fort Eustis, Virginia 23604.

4. Each transmittal of this document outside the agencies of the US Government must have prior approval of US Army Aviation Materiel Laboratories, Fort Eustis, Virginia 23604.

5. In addition to security requirements which apply to this document and must be met, each transmittal outside the agencies of the US Government must have prior approval of US Army Aviation Materiel Laboratories, Fort Eustis, Virginia 23604.

6. Each transmittal of this document outside the Department of Defense must have prior approval of US Army Aviation Materiel Laboratories, Fort Eustis, Virginia 23604.

7. In addition to security requirements which apply to this document and must be met, each transmittal outside the Department of Defense must have prior approval of US Army Aviation Materiel Laboratories, Fort Eustis, Virginia 23604.

8. This document may be further distributed by any holder only with specific prior approval of US Army Aviation Materiel Laboratories, Fort Eustis, Virginia 23604.

9. In addition to security requirements which apply to this document and must be met, it may be further distributed by the holder only with specific prior approval of US Army Aviation Materiel Laboratories, Fort Eustis, Virginia 23604.

DISCLAIMER

10. The findings in this report are not to be construed as an official Department of the Army position unless so designated by other authorized documents.

11. When Government drawings, specifications, or other data are used for any purpose other than in connection with a definitely related Government procurement operation, the United States Government thereby incurs no responsibility nor any obligation whatsoever; and the fact that the Government may have formulated, furnished, or in any way supplied the said drawings, specifications, or other data is not to be regarded by implication or otherwise as

in any manner licensing the holder or any other person or corporation, or conveying any rights or permission, to manufacture, use, or sell any patented invention that may in any way be related thereto.

12. Trade names cited in this report do not constitute an official endorsement or approval of the use of such commercial hardware or software.

DISPOSITION INSTRUCTIONS

13. Destroy this report when no longer needed. Do not return it to originator.

14. When this report is no longer needed, Department of the Army organizations will destroy it in accordance with the procedures given in AR 380-5.

ACCESSION for
CFSTI WHITE SECTION
DDC BUFF SECTION
UNANNOUNCED
JUSTIFICATION
BY
DISTRIBUTION/AVAILABILITY CODES
DIST. | AVAIL. and/or SPECIAL
1

Report 133

Stress Report
Nose Landing Gear Assembly

DDC
RECEIVED
MAR 10 1967
B

XV-5A Lift Fan
Flight Research Aircraft Program

November 1963

ADVANCED ENGINE AND TECHNOLOGY DEPARTMENT
GENERAL ELECTRIC COMPANY
CINCINNATI, OHIO 45215

APR 1966
ML

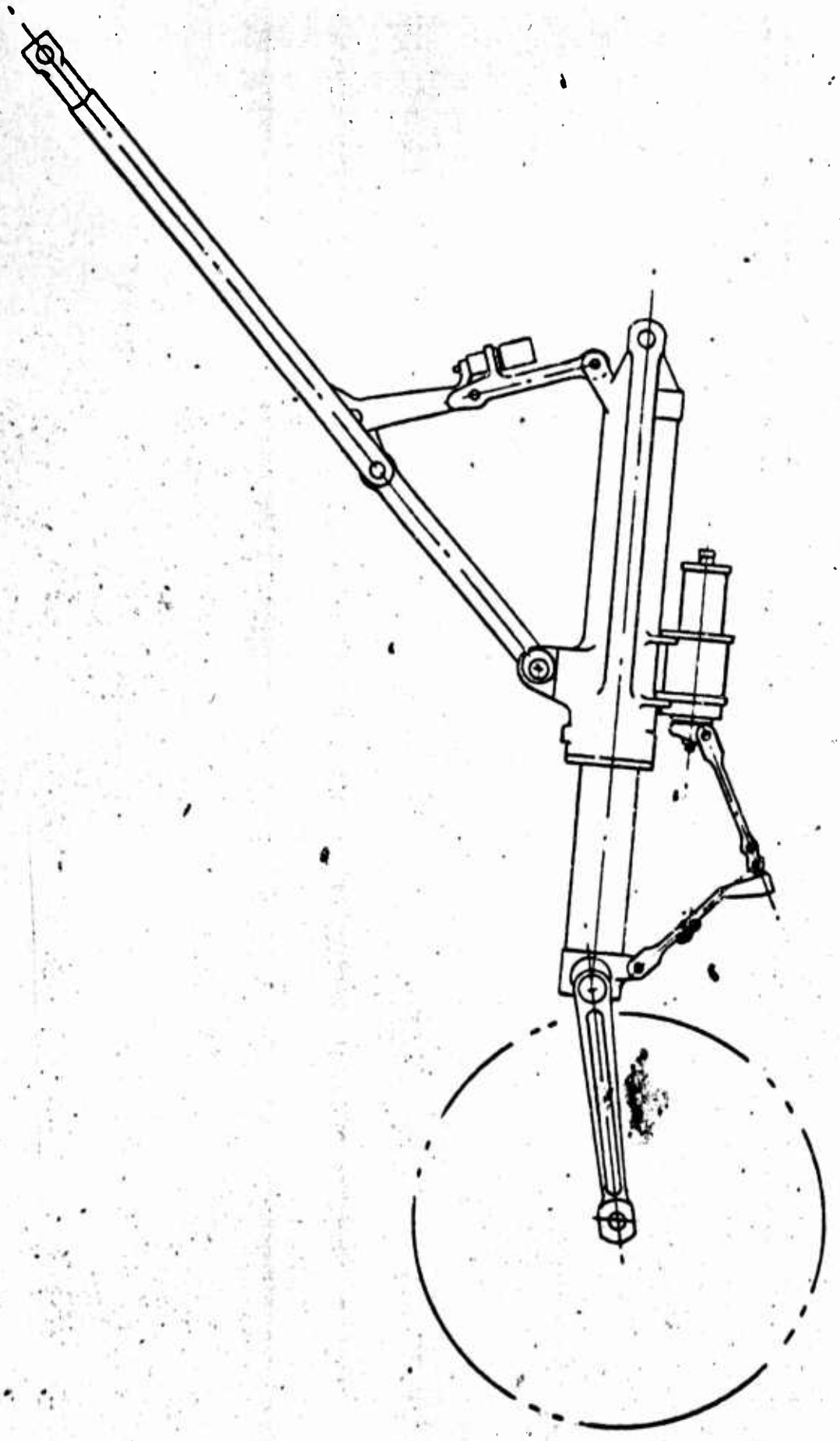

TABLE OF CONTENTS

		Page
1.0	Preface	9
2.0	References	10
3.0	Drawing References	11 - 12
4.0	Minimum Margins of Safety	13 Thru 17
5.0	Discussion	18 Thru 20
6.0	Stress Symbols	21 Thru 23
7.0	Basic Geometry	24 Thru 28
8.0	Basic Loads	29 Thru 31
	Section 1:	32 Thru 41
	Unit Solution	32
	Section 2:	42 Thru 132
	Deflection Analysis:	42
	Outline of Strut Deflection (Matrix)	42 Thru 132
	Deflection Due to Spin-up (Fwd.) 9200#	115
	Deflection Due to Springback (Fwd.) 9200#	122
	Deflection Due to Turning (Fwd.) 12,500#	132
	Section 3:	133 Thru 149
	Attach Point and Bearing Reactions (Including Secondary Bending)	133

TABLE OF CONTENTS (con't)

	Page
Section 4:	150 Thru 191
Cylinder Analysis (1511L104)	151 Thru 191
Trunnion Pin (1511L108)	181
Section 5:	192 Thru 210
Inner Cylinder (1511L103)	196
Section 6:	211 Thru 238
Torque Link - Upper (1511L135)	213 Thru 219
Pin (1511L134)	220 Thru 222
Torque Link - Lower (1511L136)	223 Thru 236
Ball - Apex (1511L137)	237 - 238
Section 7:	239 Thru 268
Pin - Drag Brace (1511L146)	240
Drag Brace - Lower (1511L201)	241 Thru 246
Drag Brace - Upper (1511L202)	247 Thru 254
Bolt - Crossbeam (1511L220)	255
Crossbeam (1511L203)	256 Thru 267
Pin - Trunnion (1511L204)	268

TABLE OF CONTENTS (con't)

	Page
Section 8:	269 Thru 281
Axle (1511L130)	278 Thru 280
Support (1511L129)	281
Section 9:	282 Thru 301
Piston Head (1511L124)	286 - 287
Cam - Lower (1511L123)	288 - 289
Bearing Adapter (1511L121)	290 - 291
Orifice Support Tube (1511L126)	292 Thru 296
Gland Nut (1511L127)	297 Thru 299
Pin - Metering (1511L125)	300 Thru 301
Section 10: - Retraction Actuator	302 Thru 312
Cylinder Assembly (1511L303)	305 Thru 308
Piston (1511L302)	309
Bearing (1511L304)	310
Nut (1511L305)	311 - 312

TABLE OF CONTENTS (con't)

		Page
	TABLES	
I.	Variable Strut Dimensions	26
II.	Torque Arm Geometry	27
III.	Summary Loads	30
IV.	Summary Taxi Loads	31
V.	Piston Bending Moment (Matrix)	43 Thru 56
VI.	Bearing Reactions (Matrix)	57 Thru 68
VII.	Cylinder Reactions (Matrix)	79 Thru 102
VIII.	Summary Cylinder Reactions	103
IX.	Summary Bearing Reactions	104
X.	Cylinder Bending Moment (Matrix)	105 Thru 132
XI.	Strut Reactions (With Secondary Bending)	133 Thru 149

TABLE OF CONTENTS (con't)

		Page
	FIGURES	
I.	Attach Point Diagram	25
II.	Torque Arm Geometry	28
III.	Elastic Curve for Piston and Cylinder Spin-up (Fwd.) 9200#	114 - 115
IV.	Elastic Curve for Piston and Cylinder Springback (Fwd.) 9200#	121 - 122
V.	Elastic Curve for Piston and Cylinder Turning (Fwd.) 12,500#	131 - 132
VI.	Cylinder (Sections)	151
VII.	Loading	152
VIII	Inner Cylinder (Sections)	193
IX	Torque Link - Upper (Sections)	213
X	Torque Link - Lower (Sections)	223
XI	Crossbeam (Sections)	256
XII	Axle	270
XIII	Orifice Support Tube	292
XIV	Retraction Actuator	303

TABLE OF CONTENTS (con't)

Page

CURVES

Piston Bending Moment	50
Cylinder Bending Moment	111
Cylinder Bending Moment (Deflected)	155
Piston Bending Moment (Deflected)	194
Bending Modulus of Rupture - 7079T6 Alum. Alloy	314
Bending Modulus of Rupture for Round Alloy Steel	315
Bending Modulus of Rupture 180/200 ksi Steel	316
Bending Modulus of Rupture 220/240 ksi Steel	317
Bending Modulus of Rupture 2014-T6 Alum. Alloy	313
Bending Modulus of Rupture 260/280 ksi Steel Tubing.	318

1.0 PREFACE

This report consists of data substantiating the structural integrity of the nose landing gear assembly and the trunnion pins required for attachment to the airplane.

This assembly is for the Ryan Aeronautical Corporation, San Diego, Ryan XV5A Airplane. The basic landing and taxi loads are obtained from Ryan (basic loads) report dated October 10, 1962 hereafter noted as reference (1) in this stress analysis. All loads are considered as limit and proper conversion to ultimate loads have been made.

2.0 REFERENCES

1. Ryan Report dated, 10 October 1962, and Drawing SCDL002 (Geometry)
2. MIL-HDBK5
3. Roark - Second Edition Stress and Strain
4. Peery - Aircraft Structures 1950

3.0 DRAWING REFERENCES

1511L103	Inner Cylinder
1511L104	Cylinder
1511L108	Trunnion Pin
1511L121	Bearing Adapter
1511L123	Cam
1511L124	Piston Head
1511L125	Pin - Metering
1511L126	Orifice Support Tube
1511L127	Gland Nut
1511L129	Support
1511L130	Axle
1511L134	Pin (Torque Link)
1511L135	Torque Link - Upper
1511L136	Torque Link - Lower
1511L137	Ball - Apex
1511L146	Pin - Drag Brace
1511L201	Drag Brace - Lower
1511L202	Drag Brace - Upper
1511L203	Crossbeam

3.0 DRAWING REFERENCES (con't)

1511L204	Pin - Trunnion
1511L220	Bolt - Crossbeam
1511L300	Retraction Actuator
1511L302	Piston
1511L303	Cylinder Assembly
1511L304	Bearing
1511L305	Nut

4.0 MINIMUM MARGINS OF SAFETY

BASED ON ULTIMATE LOADS

PART	SECTION	CRITICAL COND.	LOADING					MARGIN OF SAFETY
			BEND	TEN.	COMP.	TORSION	SHEAR	
Cylinder (1511L104) P. 165 thru P. 191	A-A	Turning (FWD)	X	X		X	X	2.68
	B-B	Spin-up (FWD)	X	X	X		X	.104
	C-C	Spin-up (FWD)	X	X			X	.580
	Drag Brace Lug	Spin-up (FWD)					Shear Brg.	.37
	Trunnion Lug	Spin-up (FWD)					Brg.	.04
	Trunnion Pin 1511L108	Spin-up (FWD)	X				X	1.38
	Trunnion Left Hand	Spin-up (FWD)	X		X	X	X	.81
	Bulkhead	VTOL(AFT) Max. Vert.					X	.135
Inner Cylinder (1511L103) P. 196 thru P. 210	A-A	Spin-up (FWD)	X		X		X	.49
	B-B	Spin-up (FWD)	X	X	X			.03
	C-C	Spin-up (FWD)	X		X		X	.13
	D-D	Spin-up (FWD)	X		X	X	X	.05
	E-E	Turning (FWD)	X		X		X	.034
	E-E	Spin-up (FWD)	X		X		X	1.51
	F-F	Spin-up (FWD)	X		X		X	1.90
	F-F	Turning (FWD)	X		X		X	.075

CALC			REVISED	DATE	NOSE GEAR XV5A	1511L
CHECK						Ryan
APR					H W LOUD MACHINE WORKS, INC 887 EAST SECOND ST. POMONA CALIFORNIA	PAGE 13
APR						

4.0 MINIMUM MARGINS OF SAFETY CONT'D

PART	SECTION	CRITICAL COND.	LOADING					MARGIN OF SAFETY
			BEND	TEN.	COMP.	TORSION	SHEAR	
Torque Link Upper (1511L135 P. 215 thru P. 219	A-A	Turning (FWD)	X				X	.45
	B-B	"	X				X	1.58
	C-C	"	X				X	.61
	D-D	"	X				X	1.79
	E-E	"	X	X			X	.95
Pin (1511L134) P. 220 thru P. 222	A-A	Turning (FWD)	X					+ LGE
	B-B	"	X				X	+ LGE
Torque Link Lower (1511L136) P. 224 thru P. 236	A-A	Turning (FWD)				X		.15
	B-B	"	X				X	+ LGE
	C-C	"		X			X	+ LGE
	D-D	"	X	X			X	.32
	Socket						Brg.	.59
Ball (1511L137) P. 237-238	3	Turning (FWD)	X				X	1.81
Pin-Drag Brace (1511L146) P. 240		Springback (FWD)	X				X	.26

			REVISED	DATE
CALC				
CHECK				
APP				
APP				

NOSE GEAR XV5A

H W LOUD MACHINE WORKS, INC.
887 EAST SECOND ST. POMONA CALIFORNIA

1511L

Ryan

4.0 MINIMUM MARGINS OF SAFETY CONT'D

PART	SECTION	CRITICAL COND.	LOADING					MARGIN OF SAFETY
			BEND	TEN.	COMP.	TORSION	SHEAR	
Drag Brace Lower (1511L201) P. 241 thru P. 246		Spin-up (FWD)					Shear Brg.	.20
	A-A	Springback (FWD)			X			.21
Drag Brace Upper (1511L202) P. 248 thru P. 254								
	A-A	Springback (FWD)	X		X			1.31
	A-A	Spin-up (FWD)	X	X				1.58
	Column	Springback			X			.055
	Lug	Spin-up (FWD)					X	.24
	Attachment Hole	Springback					Brg.	.28
Bolt (1511L220) P. 255								
							X	.20
Crossbeam (1511L203) P. 257 thru P. 267								
	Trunnion Lug	Springback (FWD)		X				.01
	A-A		X	Q	X		X	+ LGE
	B-B	Extension (PROOF)	X				X	.05
	C-C	"	X					1.12

CALC			REVISED	DATE	NOSE GEAR XV5A	1511L
CHECK						Ryan
APP					H W LOUD MACHINE WORKS, INC. 887 EAST SECOND ST. POMONA, CALIFORNIA	PAGE 15
APP						

4.0 MINIMUM MARGINS OF SAFETY CONT'D

PART	SECTION	CRITICAL COND.	LOADING					MARGIN OF SAFETY
			BEND	TEN.	COMP.	TORSION	SHEAR	
Pin (1511L204) P. 268	Shear Face		X				X	.01
Axle (1511L130) P. 278 thru P. 280	A-A	Turning (FWD)	X					.52
	Retainer	"					X	.32
Support (1511L129) P. 281							X	.10
Piston Head (1511L124) P. 286-287	Threads	VTOL(AFT) Max Vert.					X	+ LGE
Cam-Lower (1511L123) P. 288-289		Extended					Brg.	.30
Bearing Adapter (1511L121) P. 290-291							Brg.	.62
Orifice Support Tube (1511L126) P. 292 thru P. 296					X			.03

4.0 MINIMUM MARGINS OF SAFETY CONT'D

PART	SECTION	CRITICAL COND.	LOADING					MARGIN OF SAFETY
			BEND.	TEN.	COMP.	TORSION	SHEAR	
Gland Nut (1511L127) P. 297 thru P. 299	A-A						Brg.	1.68
	B-B		X	X				.04
Pin (1511L125) P. 300-301								
							X	+ LGE
Cylinder (1511L303) P. 303 thru P. 308			RETRACTION ACTUATOR					
	Lug						Shear Brg.	.09
	Threads						X	+ LGE
Piston (1511L302) P. 309								
				X				1.56
Bearing (1511L304) P. 310								
							Brg.	.20
Nut (I511L305) P. 311-312								
	A-A		X					.07
	B-B		X	X				1.24

5.0 DISCUSSION

This report includes an analysis of the XV5A Nose Landing Gear Assembly major components. These components and their material and heat treat condition are as follows:

Components	Material	Ultimate H. T. Condition
1511L103 Inner Cylinder	AMS6427 (4330 Mod.)	220/240 KSI
1511L104 Cylinder	7079T6 Alum. Alloy	71 KSI (Hand Forging)
1511L108 Trunnion Pin	4140 Steel	180/200 KSI
1511L121 Bearing Adapter	2024T4 Alum. Alloy	70 KSI
1511L123 Cam-Lower	7075T6 Alum. Alloy	80 KSI
1511L124 Piston Head	7075T6 Alum. Alloy	80 KSI
1511L125 Pin-Metering	2024T4 Alum. Alloy	70 KSI
1511L126 Orifice Support Tube	2024T4 Alum. Alloy	70 KSI
1511L127 Gland Nut	2024T4 Alum. Alloy	70 KSI
1511L129 Support	2024 T4 Alum. Alloy	62 KSI
1511L130 Axle	4340 Steel	180/200 KSI
1511L134 Pin (Torque Link)	4140 Steel	180/200 KSI
1511L135 Torque Link-Upper	2014T6 Alum. Alloy	64 KSI
1511L136 Torque Link-Lower	2014T6 Alum. Alloy	64 KSI
1511L137 Ball-Apex	17-4PH Steel	180/200 KSI
1511L146 Pin-Drag Brace	4140 Steel	180/200 KSI

5.0 DISCUSSION (con't)

Components		Material	Ultimate H. T. Condition
1511L201	Drag Brace-Lower	7075T6 Alum. Alloy	80 KSI
1511L202	Drag Brace-Upper	7075T6 Alum. Alloy	80 KSI
1511L203	Crossbeam	7075T6 Alum. Alloy	77 KSI
1511L204	Pin-Trunnion	7075T6 Alum. Alloy	77 KSI
1511L220	Bolt-Crossbeam	7075T6 Alum. Alloy	77 KSI
1511L302	Piston	4140 Steel	125/150 KSI
1511L303	Cylinder Assembly	2024T4 Alum. Alloy	62 KSI
1511L304	Bearing	2024T4 Alum. Alloy	62 KSI
1511L305	Nut	2024T4 Alum. Alloy	62 KSI

5.0 DISCUSSION (con't)

Secondary bending due to strut deflection is included in the analysis of the cylinder and inner cylinder (also known as the piston). The effect of strut deflection is also included in the attach point reactions. The deflection was taken in the direction of the load for each critical condition with gear at F.E. -1.6 and F.E. -5.3. Loads were taken from Ryan Report dated 10 October 1962, and are listed in Tables III and IV of this report.

Conditions - Spin-up (Fwd.) 9200#, Springback (Fwd.) 9200#, and Turning (Fwd.) 12,500# are used for strut deflections. The calculated deflection at the axle centerline for Spin-up (Fwd.) 9200# is 1.23 in., Springback (Fwd.) 9200# is -1.144 in., and for Turning (Fwd.) 12,500# is .290 in. These deflections are utilized in determining the reaction loads on the cylinder, piston, drag brace, crossbeam, and axle. These reaction loads are determined by matrix system on pages 133 thru 149.

The minimum margins of safety for all of the nose landing major components are listed on pages 13 thru 17.

6.0 LIST OF STRESS SYMBOLS

ALLOWABLE STRESSES

F_{tu} = Allowable Ultimate Tensile Stress - psi

F_{ty} = Allowable Yield Tensile Stress - psi

F_b = Allowable Bending Stress - psi

F_{br} = Allowable Bearing Stress - psi

F_{cu} = Allowable Ultimate Compressive Stress - psi

F_{cy} = Allowable Yield Compressive Stress - psi

F_{cc} = Upper Limit of Column Stress For Local Failure - psi

F_{co} = Upper Limit of Column Stress for Primary Failure

F_{st} = Allowable Torsional Stress - psi

F_{su} = Allowable Shear Stress - psi

ALLOWABLE LOADS

P_{bru} = Ultimate Allowable Shear Bearing Load - lbs.

P_{tu} = Ultimate Allowable Tension Load - lbs.

STRESS RATIOS

R_{bu} = Ultimate Tension or Compression Bending Modulus Stress Ratio

R_c = Compressive Stress Ratio

R_t = Tension Stress Ratio

R_{ht} = Tension or Compression Hoop Stress Ratio

R_{su} = Ultimate Transverse Shear Stress Ratio

R_{st} = Torsion Stress Ratio

6.0 STRESS SYMBOLS (cont.)

STRESSES

f_t	=	Tensile Stress - psi
f_b	=	Bending Stress - psi
f_{br}	=	Bearing Stress - psi
f_c	=	Compressive Stress - psi
f_s	=	Shear Stress - psi
f_{st}	=	Torsional Shear Stress - psi
f_{ht}	=	Hoop Tension Stress - psi
f_{hc}	=	Hoop Compressive Stress - psi

MISCELLANEOUS SYMBOLS

P	=	Axial Load - lbs.
M	=	Bending Moment - in.-lbs.
T	=	Torsional Moment - in-lbs.
S	=	Shear Force - lbs.
E	=	Tensile Modulus of Elasticity - psi
Ec	=	Compressive Modulus of Elasticity - psi
G	=	Modulus of Rigidity - psi
ρ	=	Radius of Gyration - in.
I	=	Moment of Inertia - $(in.)^4$
e	=	Eccentricity - in.
O.D.	=	Outer Diameter - in.
I.D.	=	Inner Diameter - in.
A	=	Area - $(in.)^2$

CALC	Bachit		REVISED	DATE	NOSE GEAR XV5A	15HL
CHECK						RYAN
APR					H. W. LOUD MACHINE WORKS, INC. 887 East Second St., Pomona, California	PAGE 22
APR						

6.0 STRESS SYMBOLS (cont.)

MISCELLANEOUS SYMBOLS - (cont'd)

c	=	Distance from Neutral Axis to Extreme Fiber - in.
c	=	Fixity Coefficient.
l	=	Length - in.
t	=	Thickness
ϕ	=	Angular Deflection - degrees
$\triangle$	=	Linear Deflection - in.
M_A	=	Allowable Bending Moment - in. - lbs.
P_A	=	Allowable Load - lbs.
T_A	=	Allowable Torsional Moment - in. - lbs.
PSI	=	Pounds per Square Inch .
LBS	=	Pounds
IN.	=	Inch
Q	=	First Moment of Area
μ	=	Poisson's Ratio
A_t	=	Tension Area - $(in.)^2$
A_{br}	=	Bearing Area - $(in.)^2$
K	=	Bending Modulus of Rupture Parameter
Z	=	Section Modulus - $(in.)^3$
I_p	=	Polar Moment of Inertia - $(in.)^4$

NOSE GEAR

BASIC GEOMETRY

CALC	[illegible]		REVISED	DATE	NOSE GEAR XV5A	1511L
CHECK						RYAN
APR						
APR					H. W. LOUD MACHINE WORKS, INC. 887 EAST SECOND ST., POMONA, CALIFORNIA	PAGE 24

ATTACH POINT DIAGRAM
FIG. I

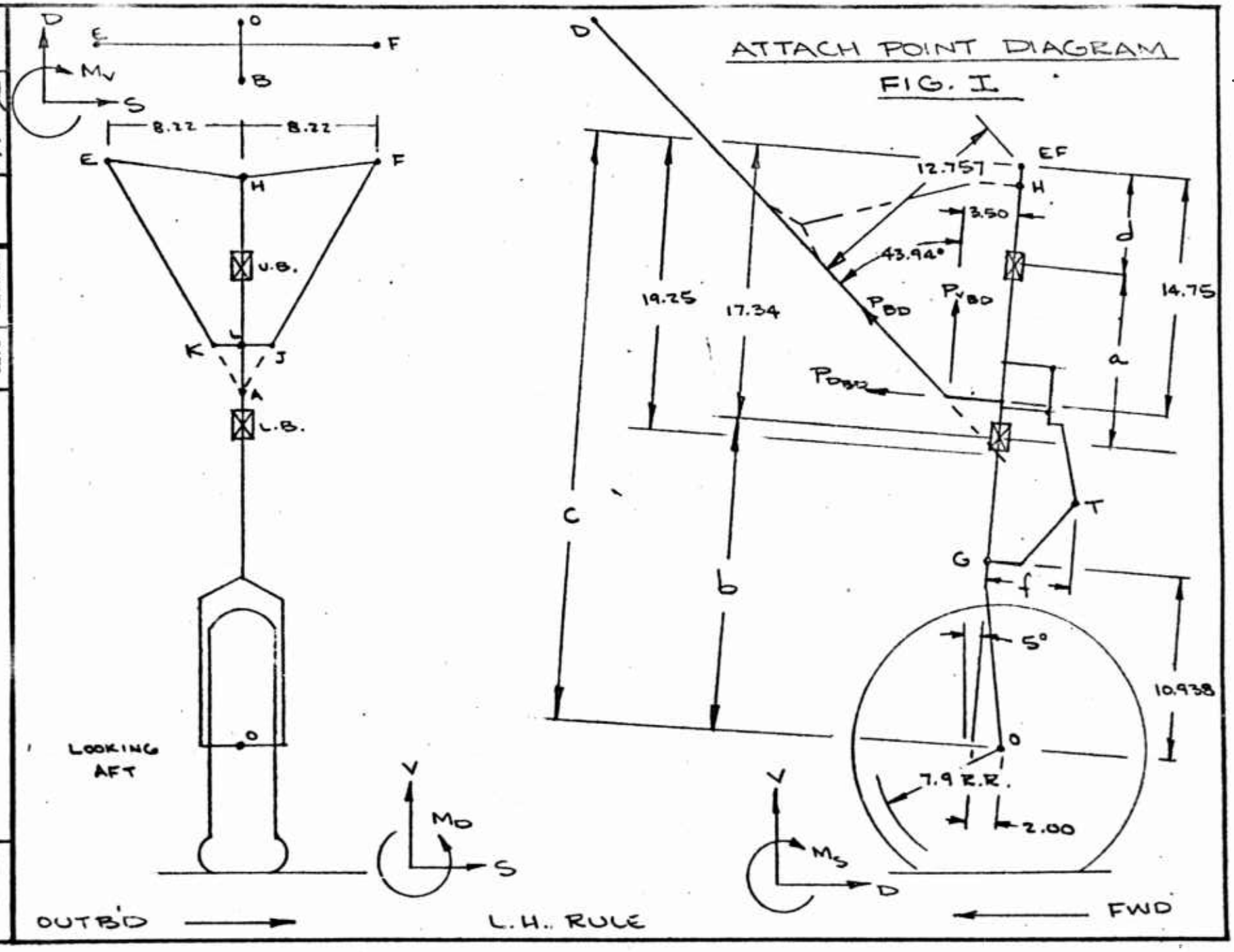

CALC	CHECK	APR	APR		
				REVISED	DATE

NOSE GEAR XVSA

H. W. LOUD MACHINE WORKS, INC.
887 EAST SECOND ST., POMONA, CALIFORNIA

PAGE 25	RYAN	1511L

TABLE I

VARIABLE STRUT DIMENSIONS

EXTENDED DIMENSIONS

$a = 6.218$

$b = 21.007$

$c = 38.35$

$d = c - (b+a) = 38.35 - 27.225 = 11.125$

∫ OLEO	F.E.	F.E.-1.6	F.E.-5.3
a	6.218	7.818	11.518
b	21.007	19.407	15.707
c	38.35	36.75	33.05
d	11.125	9.525	5.825

CALC	[illegible]		REVISED	DATE	NOSE GEAR XV5A VARIABLE STRUT
CHECK					
APR					
APR					

H. W. LOUD MACHINE WORKS, INC.
887 EAST SECOND ST., POMONA, CALIFORNIA

1511L

RYAN

PAGE 26

TORQUE ARM GEOMETRY

TABLE II

δ OLEO	F.E.	F.E.-1.6	F.E.-5.3
$e = 10.507 - \delta$ OLEO	10.507	8.907	5.207
$\theta = \tan^{-1} \frac{4.200 - 1.75}{10.507}$	13.12°	15.38°	25.20°
$\sin \theta$	.22699	.26522	.42578
$g = \frac{4.200 - 1.75}{\sin \theta}$	10.793	9.238	5.754
$\alpha = \cos^{-1} \frac{g^2 + 6.88^2 - 6.00^2}{2(g)(6.88)}$	30.61°	40.49°	55.85°
$\beta = \theta + \alpha$	43.73°	55.87°	81.05°
$\sin \beta$	.69126	.82777	.98782
$\cos \beta$	.72261	.56107	.15557
$f = 1.75 + 6.88 \sin \beta$	6.506	7.445	8.546
$h = 6.88 \cos \beta$	4.972	3.860	1.070
$j = e - h$	5.535	5.047	4.137
$k = j - .438$	5.097	4.609	3.699
$m = a + k$	11.315	12.427	15.217

CALC	[illegible]		REVISED	DATE	NOSE GEAR XV5A	1511L
CHECK					TORQUE ARM GEOMETRY	RYAN
APR					H. W. LOUD MACHINE WORKS, INC. 887 EAST SECOND ST., POMONA, CALIFORNIA	PAGE 27
APR						

TORQUE ARM GEOMETRY FIG. II

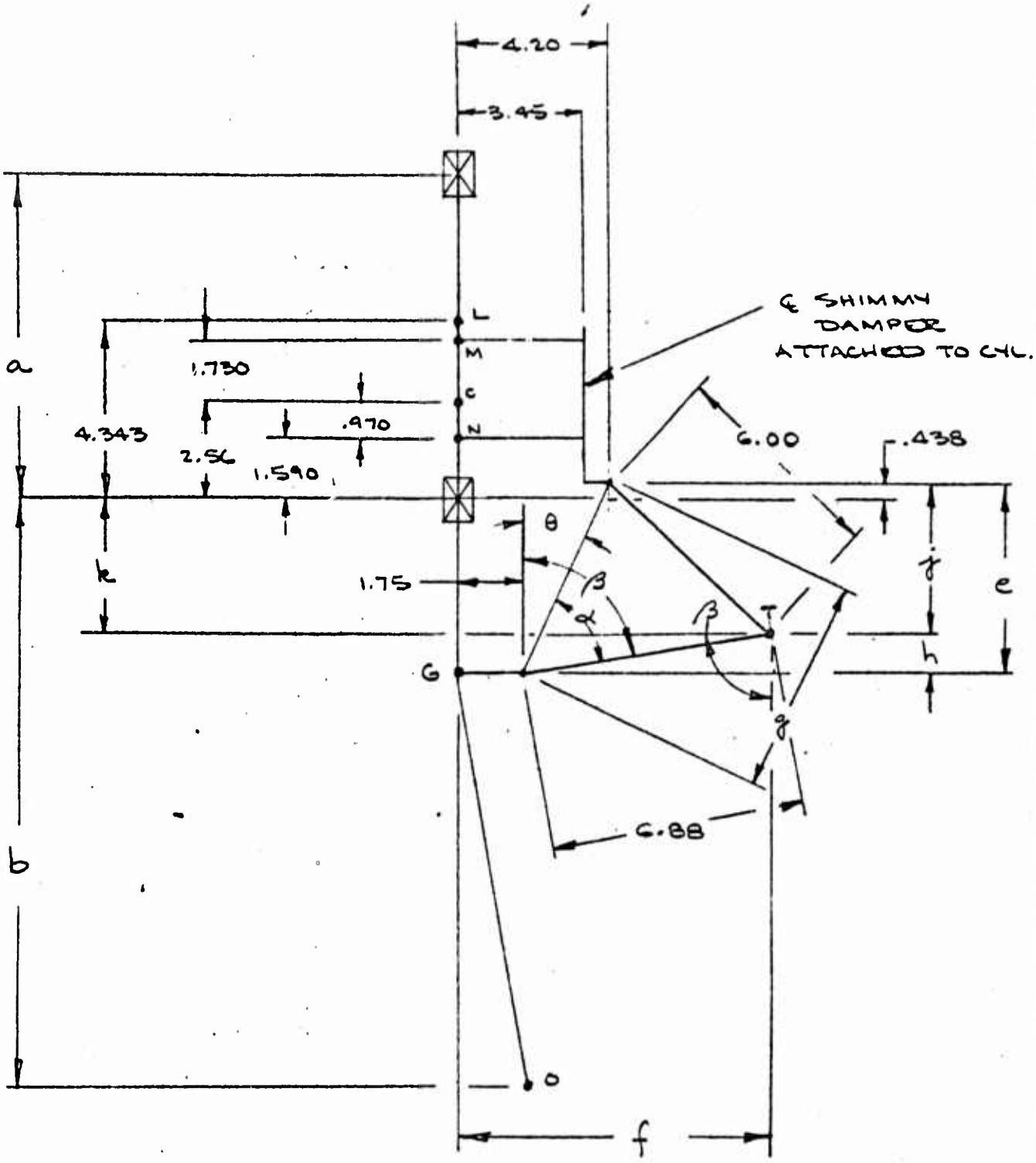

CALC	[signature]		REVISED	DATE	NOSE GEAR XV5A	1511L
CHECK					TORQUE ARM GEOMETRY	RYAN
APR					H. W. LOUD MACHINE WORKS, INC. 887 EAST SECOND ST., POMONA, CALIFORNIA	PAGE 28
APR						

BASIC LOADS

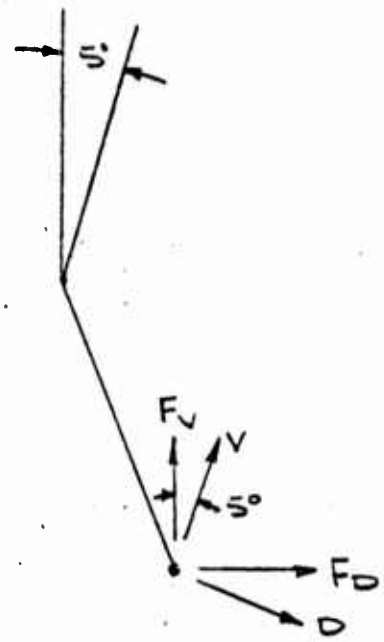

$\sin 5° = .08716$

$\cos 5° = .99619$

$V = F_V \cos 5° + F_D \sin 5°$

$D = -F_V \sin 5° + F_D \cos 5°$

$S = S$

$V = .99619\, F_V + .08716\, F_D$

$D = -.08716\, F_V + .99619\, F_D$

$S = F_S$

CALC	[signature]		REVISED	DATE	NOSE GEAR XV5A	1511L
CHECK					BASIC LOADS	RYAN
APR					H. W. LOUD MACHINE WORKS, INC. 887 EAST SECOND ST., POMONA, CALIFORNIA	PAGE 29
APR						

CALC	CHECK	APR	APR

REVISED	DATE

TABLE III

⟨1⟩ SUMMARY LOADS (GEAR FWD)

GEAR	WEIGHT	SPINUP V	SPINUP D	SPRINGBACK V	SPRINGBACK D	MAX. VERT. REA. F_V	MAX. VERT. REA. F_D	SIDE DRIFT F_V	SIDE DRIFT F_D	SIDE DRIFT F_S
NOSE C.G. 240	9200	5827	3600	6205	-4441	6230 / 6342 *	1558 / 1009 *	0	0	0
	12500	3238	2001	3192	-2438	3205 / 3263 *	801 / 519 *	0	0	0

⟨1⟩ SUMMARY LOADS (GEAR AFT)

GEAR	WEIGHT	SPINUP V	SPINUP D	SPRINGBACK V	SPRINGBACK D	MAX. VERT. REA. F_V	MAX. VERT. REA. F_D	SIDE DRIFT F_V	SIDE DRIFT F_D	SIDE DRIFT F_S
NOSE C.G. 240	9200	3132	1935	3199	-2242	3212 / 3270 *	803 / 520 *	0	0	0
VTOL										
NOSE C.G. 240	9200					8480 / 8448 *	0 / -739 *	0	0	0

SPINUP & SPRING BACK LOADS NORMAL & PARALLEL TO OLEO.
MAX. VERT. REACTION & SIDE DRIFT LOADS ARE IN THE PLANE OF THE GROUND.

* ROTATED NORMAL & PARALLEL TO OLEO.

⟨1⟩ REF. 1 P. 10

NOSE GEAR XV5A

SUMMARY LOADS

H. W. LOUD MACHINE WORKS, INC.
887 EAST SECOND ST., POMONA, CALIFORNIA

RYAN

ISIL

CALC | CHECK | APR | APR

REVISED | DATE

NOSE GEAR XVSA

SUMMARY TAXI LOADS

H. W. LOUD MACHINE WORKS, INC.
887 EAST SECOND ST., POMONA, CALIFORNIA

RYAN | 1511L | PAGE 31

TABLE IV

① SUMMARY TAXI LOADS

(GEAR FWD)

GEAR	WEIGHT	3 PT BRAKED ROLL		2 PT BRAKED ROLL		UNSYMMETRICAL BRAKING			TURNING		
		F_V	F_D	F_V	F_D	F_V	F_D	F_S	F_V	F_D	F_S
NOSE C.G.240	12500	3205 / * 3193	0 / * -279	0	0	4895 / * 4876	0 / * -427	1105	3205 / * 3193	0 / * -279	1602

① SUMMARY TAXI LOADS

(GEAR AFT)

GEAR	WEIGHT	3PT BRAKED ROLL		2 PT BRAKED ROLL		UNSYMMETRICAL BRAKING			TURNING		
		F_V	F_D	F_V	F_D	F_V	F_D	F_S	F_V	F_D	F_S
NOSE C.G.240	9200	3850 / * 3835	0 / * -336	0	0	4187 / * 4171	0 / * -365	637	3210 / * 3198	0 / * -280	1380

F_V, F_D & F_S IN PLANE OF GROUND

* ROTATED NORMAL & PARALLEL TO OLEO

① REF. 1 P. 10

SECTION I

UNIT SOLUTION

CALC	T. Gottlieb		REVISED	DATE	NOSE GEAR XV5A	1511L
CHECK					UNIT SOLUTION	RYAN
APR					H. W. LOUD MACHINE WORKS, INC. 887 EAST SECOND ST., POMONA, CALIFORNIA	PAGE 32
APR						

UNIT SOLUTION - TORQUE ARM APEX LOAD

$$f R_T + 2.00 S_o + M_{Vo} = 0$$

$$R_T = \frac{-2.00 S_o - M_{Vo}}{f}$$

$$R_T = -(2.00/f) S_o - (1/f) M_{Vo}$$

CALC			REVISED	DATE
CHECK				
APR				
APR				

NOSE GEAR XV5A

UNIT SOLUTION

H. W. LOUD MACHINE WORKS, INC.
887 EAST SECOND ST., POMONA, CALIFORNIA

1511L

RYAN

UNIT SOLUTION – ATTACH POINT REACTIONS

$\Sigma M_{S_{\overline{EF}}}$

$$12.757\, P_{\overline{BD}} - 2.00\, V_o - (c)\, D_o + M_{S_o} = 0$$

$$P_{\overline{BD}} = \frac{2.00\, V_o + (c)\, D_o - M_{S_o}}{12.757}$$

$$P_{\overline{BD}} = .1568\, V_o + .0783\,(c)\, D_o - .0783\, M_{S_o}$$

$$P_{V_{\overline{BD}}} = P_{\overline{BD}} \cos\alpha = .7201\, P_{\overline{BD}}$$

$$= .7201\left[.1568\, V_o + .0783\,(c)\, D_o - .0783\, M_{S_o}\right]$$

$$P_{V_{\overline{BD}}} = .1129\, V_o + .0564\,(c)\, D_o - .0564\, M_{S_o}$$

$$P_{D_{\overline{BD}}} = -P_{\overline{BD}} \sin\alpha = -.6939\, P_{\overline{BD}}$$

$$= -.6939\left[.1568\, V_o + .0783\,(c)\, D_o - .0783\, M_{S_o}\right]$$

$$P_{D_{\overline{BD}}} = -.1088\, V_o - .0543\,(c)\, D_o + .0543\, M_{S_o}$$

CALC	[illegible]		REVISED	DATE	NOSE GEAR XV5A	1511L
CHECK					UNIT SOLUTION	RYAN
APR					H. W. LOUD MACHINE WORKS, INC.	PAGE
APR					881 EAST SECOND ST., POMONA, CALIFORNIA	34

UNIT SOLUTION - ATTACH POINT REACTIONS - CONT'D

ΣM_{D_E}

$$16.44\, R_{V_F} + 8.22\, V_o + (c)\, S_o + M_{D_o} + 8.22\, P_{V_{\overline{BD}}} = 0$$

$$R_{V_F} = \frac{-8.22\, V_o - (c)\, S_o - M_{D_o} - 8.22\, P_{V_{\overline{BD}}}}{16.44}$$

$$R_{V_F} = -.500\, V_o - .0608\, (c)\, S_o - .0608\, M_{D_o} - .500\, P_{V_{\overline{BD}}}$$

$$R_{V_F} = -.500\, V_o - .0608\, (c)\, S_o - .0608\, M_{D_o} - .500\left[.1129\, V_o + .0564\, (c)\, D_o - .0564\, M_{S_o}\right]$$

$$R_{V_F} = -.500\, V_o - .0608\, (c)\, S_o - .0608\, M_{D_o} - .0565\, V_o - .0282\, (c)\, D_o + .0282\, M_{S_o}$$

$$R_{V_F} = -.5565\, V_o - .0608\, (c)\, S_o - .0282\, (c)\, D_o - .0608\, M_{D_o} + .0282\, M_{S_o}$$

CALC	[illegible]		REVISED	DATE	NOSE GEAR XV5A UNIT SOLUTION	1511L
CHECK						RYAN
APR					H. W. LOUD MACHINE WORKS, INC. 887 EAST SECOND ST., POMONA, CALIFORNIA	PAGE 35
APR						

UNIT SOLUTION - ATTACH POINT REACTIONS CONT'D

ΣM_{DF}

$$-16.44 R_{VE} - 8.22 V_o + (c) S_o + M_{D_o} - 8.22 P_{V\bar{B}D} = 0$$

$$R_{VE} = \frac{-8.22 V_o + (c) S_o + M_{D_o} - 8.22 P_{V\bar{B}D}}{16.44}$$

$$R_{VE} = -.500 V_o + .0608 (c) S_o + .0608 M_{D_o} - .500 P_{V\bar{B}D}$$

$$R_{VE} = -.500 V_o + .0608 (c) S_o + .0608 M_{D_o} - .500 [.1129 V_o + .0564 (c) D_o - .0564 M_{S_o}]$$

$$R_{VE} = -.500 V_o + .0608 (c) S_o + .0608 M_{D_o} - .0565 V_o - .0282 (c) D_o + .0282 M_{S_o}$$

$$R_{VE} = -.5565 V_o + .0608 (c) S_o - .0282 (c) D_o + .0608 M_{D_o} + .0282 M_{S_o}$$

CALC	[illegible]		REVISED	DATE	NOSE GEAR XV5A	1511L
CHECK					UNIT SOLUTION	RYAN
APR					H. W. LOUD MACHINE WORKS, INC. 607 EAST SECOND ST., POMONA, CALIFORNIA	PAGE 36
APR						

UNIT SOLUTION - ATTACH POINT REACTIONS CONT'D

ΣM_{VE}

$$-16.44\, R_{DF} - 8.22\, D_o + 2.00\, S_o + M_{V_o} - 8.22\, P_{D\bar{B}D} = 0$$

$$R_{DF} = \frac{-8.22\, D_o + 2.00\, S_o + M_{V_o} - 8.22\, P_{D\bar{B}D}}{16.44}$$

$$R_{DF} = -.500\, D_o + .1217\, S_o + .0608\, M_{V_o} - .500\, P_{D\bar{B}D}$$

$$R_{DF} = -.500\, D_o + .1217\, S_o + .0608\, M_{V_o} - .500\left[-.1088\, V_o - .0543\,(c)\, D_o + .0543\, M_{S_o}\right]$$

$$R_{DF} = -.500\, D_o + .1217\, S_o + .0608\, M_{V_o} + .0544\, V_o + .0272\,(c)\, D_o - .0272\, M_{S_o}$$

$$R_{DF} = .0544\, V_o + .1217\, S_o - .500\, D_o + .0272\,(c)\, D_o - .0272\, M_{S_o} + .0608\, M_{V_o}$$

$$R_{DF} = .0544\, V_o + .1217\, S_o + (.0272\, c - .500)\, D_o - .0272\, M_{S_o} + .0608\, M_{V_o}$$

CALC	[signature]		REVISED	DATE	NOSE GEAR XV5A	1511L
CHECK					UNIT SOLUTION.	RYAN
APR					H. W. LOUD MACHINE WORKS, INC. 887 EAST SECOND ST., POMONA, CALIFORNIA	PAGE 37
APR						

UNIT SOLUTION - ATTACH POINT REACTIONS CONT'D

ΣM_{V_F}

$$16.44\,R_{D_E} + 8.22\,D_o + 2.00\,S_o + M_{V_o} + 8.22\,P_{D\bar{B}D} = 0$$

$$R_{D_E} = \frac{-8.22\,D_o - 2.00\,S_o - M_{V_o} - 8.22\,P_{D\bar{B}D}}{16.44}$$

$$R_{D_E} = -.500\,D_o - .1217\,S_o - .0608\,M_{V_o} - .500\,P_{D\bar{B}D}$$

$$R_{D_E} = -.500\,D_o - .1217\,S_o - .0608\,M_{V_o} - .500\left[-.1088\,V_o - .0543\,(c)\,D_o + .0543\,M_{S_o}\right]$$

$$R_{D_E} = -.500\,D_o - .1217\,S_o - .0608\,M_{V_o} + .0544\,V_o + .0272\,(c)\,D_o - .0272\,M_{S_o}$$

$$R_{D_E} = .0544\,V_o - .1217\,S_o + (.0272\,(c) - .500)\,D_o - .0608\,M_{V_o} - .0272\,M_{S_o}$$

ΣS

$$R_{S\bar{E}F} + S_o = 0$$

$$R_{S\bar{E}F} = -S_o$$

$$\left.\begin{aligned} R_{S_F} &= -S_o \\ R_{S_E} &= 0 \end{aligned}\right\} \quad \text{FOR } +S_o$$

$$\left.\begin{aligned} R_{S_F} &= 0 \\ R_{S_E} &= S_o \end{aligned}\right\} \quad \text{FOR } -S_o$$

CALC	Brabit		REVISED	DATE	NOSE GEAR XV5A	1511L
CHECK					UNIT SOLUTION	RYAN
APR					H. W. LOUD MACHINE WORKS, INC. 837 EAST SECOND ST., POMONA, CALIFORNIA	PAGE 38
APR						

UNIT SOLUTION - BEARING REACTIONS

$\Sigma M_{S_{LB}}$

$$a R_{D_{UB}} - 2.00 V_o - (b) D_o + M_{S_o} = 0$$

$$R_{D_{UB}} = \frac{2.00 V_o + (b) D_o - M_{S_o}}{a}$$

$$R_{D_{UB}} = (2.00/a) V_o + (b/a) D_o - (1/a) M_{S_o}$$

$\Sigma M_{S_{UB}}$ $\qquad (a+b) = 27.225$

$$-a R_{D_{LB}} - 2.00 V_o - (a+b) D_o + M_{S_o} = 0$$

$$R_{D_{LB}} = \frac{-2.00 V_o - 27.225 D_o + M_{S_o}}{a}$$

$$R_{D_{LB}} = -(2.00/a) V_o - (27.225/a) D_o + (1/a) M_{S_o}$$

$\Sigma M_{D_{LB}}$

$$-a R_{S_{UB}} + (b) S_o + (k) R_T + M_{D_o} = 0$$

$$-a R_{S_{UB}} + (b) S_o + k\left[-(2.00/f) S_o - (1/f) M_{V_o}\right] + M_{D_o} = 0$$

$$-a R_{S_{UB}} + S_o\left[b - (2.00)(k/f)\right] - (k/f) M_{V_o} + M_{D_o} = 0$$

$$R_{S_{UB}} = S_o\left[\frac{b - (2.00) k/f}{a}\right] - (k/f a) M_{V_o} + (1/a) M_{D_o}$$

CALC	[illegible]		REVISED	DATE	NOSE GEAR XVSA	1511L
CHECK					UNIT SOLUTION	RYAN
APR					H. W. LOUD MACHINE WORKS, INC. 887 EAST SECOND ST., POMONA, CALIFORNIA	PAGE 39
APR						

UNIT SOLUTION - BEARING REACTIONS CONT'D

$(a+k) = m$

$(a+b) = 27.225$

$\Sigma M_{D_{UB}}$

$$a R_{S_{LB}} + (a+b) S_o + (a+k) R_T + M_{D_o} = 0$$

$$a R_{S_{LB}} + 27.225 S_o + m\left[-(2.00/f) S_o - 1/f\, M_{V_o}\right] + M_{D_o} = 0$$

$$a R_{S_{LB}} = -27.225 S_o - m\left[-(2.00/f) S_o - 1/f\, M_{V_o}\right] - M_{D_o}$$

$$R_{S_{LB}} = -S_o\left[\frac{27.225 - 2.00\ m/f}{a}\right] + \left(m/fa\right) M_{V_o} - \left(1/a\right) M_{D_o}$$

CALC	Burchick		REVISED	DATE
CHECK				
APR				
APR				

NOSE GEAR XV5A

UNIT SOLUTION

W. LOUD MACHINE WORKS, INC.
337 EAST SECOND ST., POMONA, CALIFORNIA

1511C

RYAN

PAGE 40

$M_{S_0} = 0$

$M_{SG-} = -2.00\,V_0 - 10.938\,D_0 + M_{S_0}$

$M_{SG+} = M_{SG-}$

$M_{S_{LB}} = -2.00\,V_0 - b\,D_0 + M_{S_0}$

$M_{D_0} = 7.9\,S_0$

$M_{DG-} = 10.938\,S_0 + M_{D_0}$

$M_{DG+} = 10.938\,S_0 - h\,R_T + M_{D_0}$

$= 10.938\,S_0 + \frac{2h}{f}\,S_0 + \frac{h}{f}\,M_{V_0} + M_{D_0}$

$M_{D_{LB}} = b\,S_0 + k\,R_T + M_{D_0}$

$= b\,S_0 - \frac{2k}{f}\,S_0 - k/f\,M_{V_0} + M_{D_0}$

CALC			REVISED	DATE
CHECK				
APR				
APR				

NOSE GEAR XV5A — 1511L

UNIT SOLUTION. — RYAN

H. W. LOUD MACHINE WORKS, INC.
507 EAST SECOND ST., POMONA, CALIFORNIA

PAGE 41

SECTION 2

DEFLECTION, ANALYSIS

CALC	[illegible]		REVISED	DATE	NOSE GEAR XV5A	1511L
CHECK					DEFLECTION	RYAN
APR					H. W. LOUD MACHINE WORKS, INC. 887 EAST SECOND ST., POMONA, CALIFORNIA	PAGE 42
APR						

TABLE V - MATRIX

PISTON BENDING MOMENT

CALC			REVISED	DATE
CHECK				
APR				
APR				

NOSE GEAR XV5A

1511L

RYAN

H. W. LOUD MACHINE WORKS, INC.
817 EAST SECOND ST., POMONA, CALIFORNIA

PISTON BENDING MOMENT

GENERAL MATRIX

CONDITION- ALL CONDITIONS

		V_o	D_o	S_o	MV_o	MD_o	MS_o
	Σ						
MS_o							
MD_o				7.9			
M_o							
MS_{G-}		-2.00	-10.938				1.00
MD_{G-}				10.938		1.00	
M_{G-}							
MS_{G+}		-2.00	-10.938				1.00
MD_{G+}				$10.938+\frac{2h}{f}$	$\frac{h}{f}$	1.00	
M_{G+}							
MS_{LB}		-2.00	$-b$				1.00
MD_{LB}				$b-\frac{2k}{f}$	$-k/f$	1.00	
M_{LB}							

CALC	CHECK	APH	APH	REVISED	DATE
Brubik					

NOSE GEAR XV5A

H W LOUD MACHINE WORKS INC
887 EAST SECOND ST POMONA CALIFORNIA

ISSUE
RYAN
PAGE
44

PISTON BENDING MOMENT

DETAILED MATRIX

CONDITION - F.E. - 1.6

	Σ	V_o	D_o	S_o	M_{V_o}	M_{D_o}	M_{S_o}
M_{S_o}							
M_{D_o}				7.9			
M_o							
$M_{S_{G-}}$		-2.00	-10.938				1.00
$M_{D_{G-}}$				10.938		1.00	
M_{G-}							
$M_{S_{G+}}$		-2.00	-10.938				
$M_{D_{G+}}$				11.975	.518	1.00	
M_{G+}							
$M_{S_{LB}}$		-2.00	-19.407				1.00
$M_{D_{LB}}$				18.169	-.619	1.00	
M_{LB}							

CALC	[signature]	REVISED	DATE	NOSE GEAR XV5A		1511L
CHECK						RYAN
APR				H W LOUD MACHINE WORKS, INC		PAGE
APR				887 EAST SECOND ST POMONA CALIFORNIA		45

PISTON BENDING MOMENT

DETAILED MATRIX

CONDITION - F.E. - 5.3

		V_o	D_o	S_o	M_{V_o}	M_{D_o}	M_{S_o}
	Σ						
M_{S_o}							
M_{D_o}				7.9			
M_o							
$M_{S_{G-}}$		-2.00	-10.938				1.00
$M_{D_{G-}}$				10.938		1.00	
M_{G-}							
$M_{S_{G+}}$		-2.00	-10.938				1.00
$M_{D_{G+}}$				11.188	.125	1.00	
M_{G+}							
$M_{S_{LB}}$		-2.00	-15.707				1.00
$M_{D_{LB}}$				14.841	-.437	1.00	
M_{LB}							

CALC	[signature]		REVISED	DATE	NOSE GEAR XV5A	1511L
CHECK						RYAN
APR					H W LOUD MACHINE WORKS INC	PAGE
APR					887 EAST SECOND ST POMONA CALIFORNIA	46

PISTON BENDING MOMENT

EXTENDED MATRIX

CONDITION- SPINUP (FWD) F.E.-1.6 9200#

	Σ	V_o	D_o	S_o	M_{V_o}	M_{D_o}	M_{S_o}
		5827	3600	0	0	0	0
M_{S_o}							
M_{D_o}							
M_o							
M_{SG-}	-51031	-11654	-39377				
M_{DG-}							
M_{G-}							
M_{SG+}	-51031	-11654	-39377				
M_{DG+}							
M_{G+}							
M_{SLB}	-81519	-11654	-69865				
M_{DLB}							
M_{LB}							

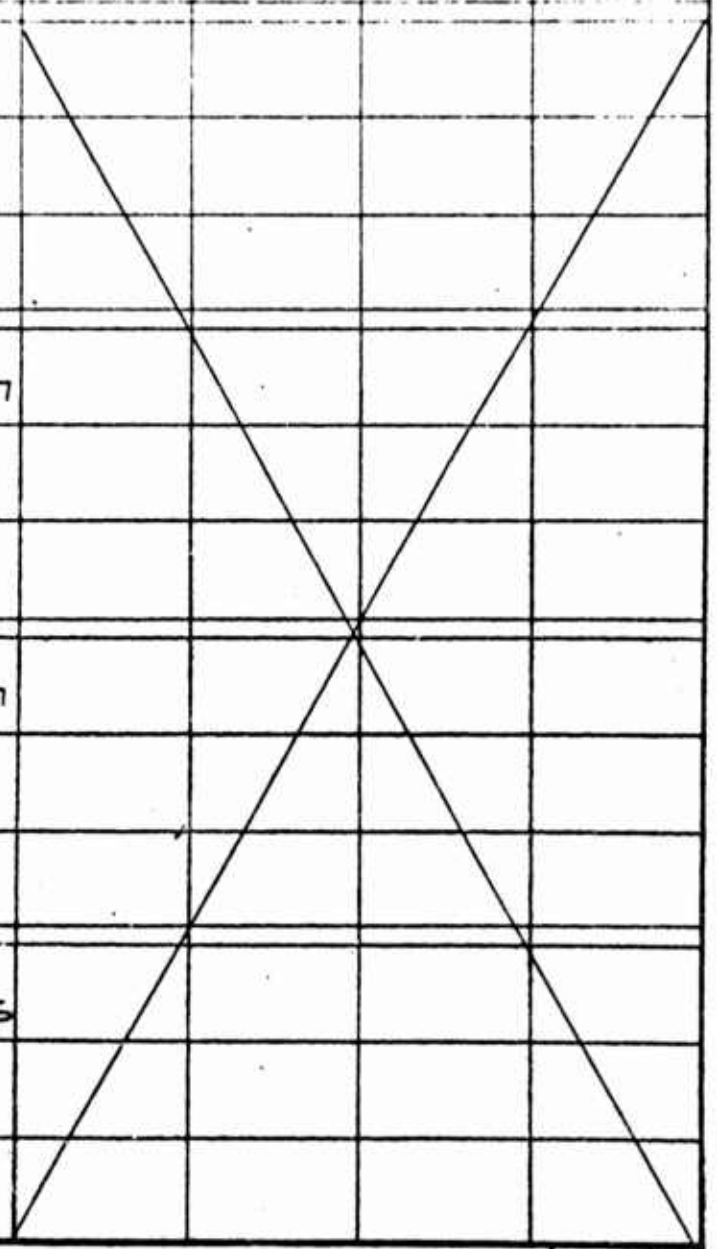

			REVISED	DATE
CALC				
CHECK				
APR				
APR				

NOSE GEAR XY5A

1511L

RYAN

H. W. LOUD MACHINE WORKS, INC.
807 EAST SECOND ST., PONDIA, CALIFORNIA

PAGE 47

PISTON BENDING MOMENT

EXTENDED MATRIX

CONDITION- SPRINGBACK (FWD) F.E.-1.6 9200#

		V_o	D_o	S_o	MV_o	MD_o	MS_o
	Σ	6205	-4441	0	0	0	0
MS_{o}							
MD_o							
M_o							
MS_{G-}	36166	-12410	48576				
MD_{G-}							
M_{G-}							
MS_{G+}	36166	-12410	48576				
MD_{G+}							
M_{G+}							
MS_{LB}	73766	-12410	86186				
MD_{LB}							
M_{LB}							

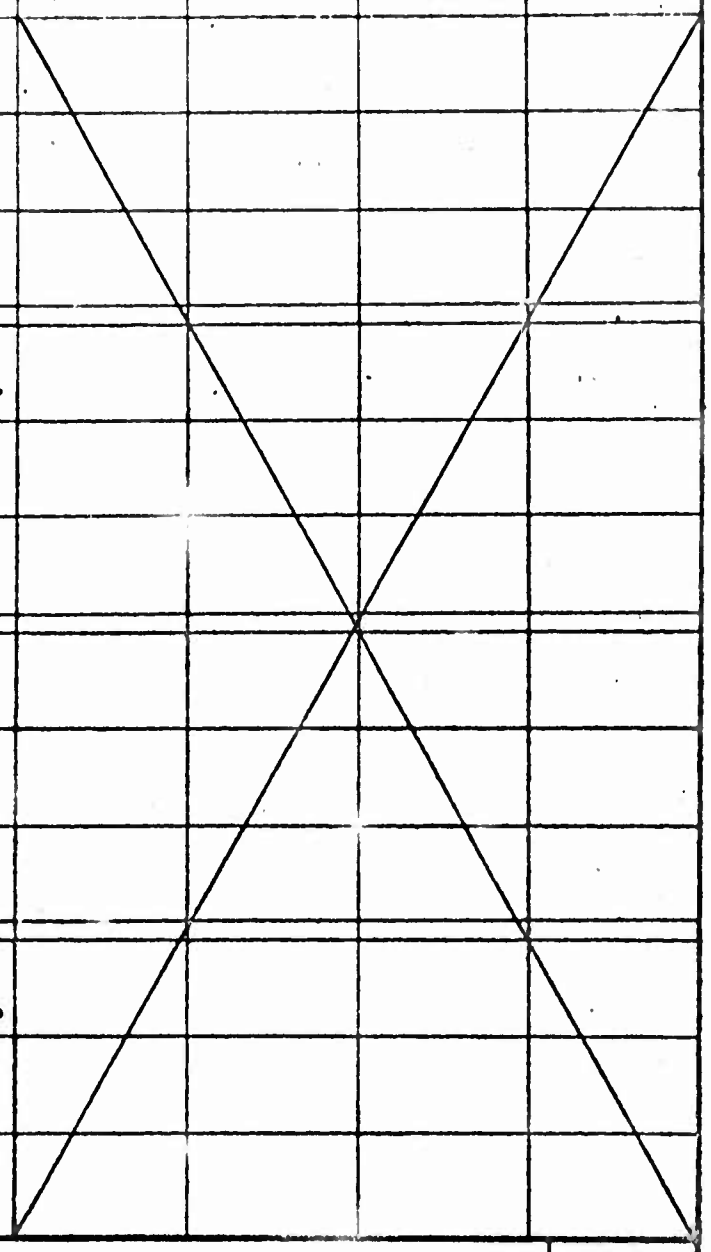

CALC	Brodhit		REVISED	DATE
CHECK				
APR				
APR				

NOSE GEAR XV5A

1511L

RYAN

H. W. LOUD MACHINE WORKS, INC.
807 EAST SECOND ST., POMONA, CALIFORNIA

PAGE 48

PISTON BENDING MOMENT

EXTENDED MATRIX

CONDITION - TURNING (FWD) F.E. - 5.3 12500#

		V_o	D_o	S_o	MV_o	MD_o	MS_o
	Σ	3193	-279	1602	0	0	2204
MS_o							
MD_o	12656			12656			
M_o							
MS_{G-}	-1130	-6386	3052				2204
MD_{G-}	17523			17523			
M_{G-}							
MS_{G+}	-1130	-6386	3052				2204
MD_{G+}	17923			17923			
M_{G+}							
MS_{LB}	200	-6386	4382				2204
MD_{LB}	23775			23775			
M_{LB}							

			REVISED	DATE	NOSE GEAR XV5A	1511L
CALC	Barlik					RYAN
CHECK						
APR					H. W. LOUD MACHINE WORKS, INC.	PAGE
APR					887 EAST SECOND ST., POMONA, CALIFORNIA	49

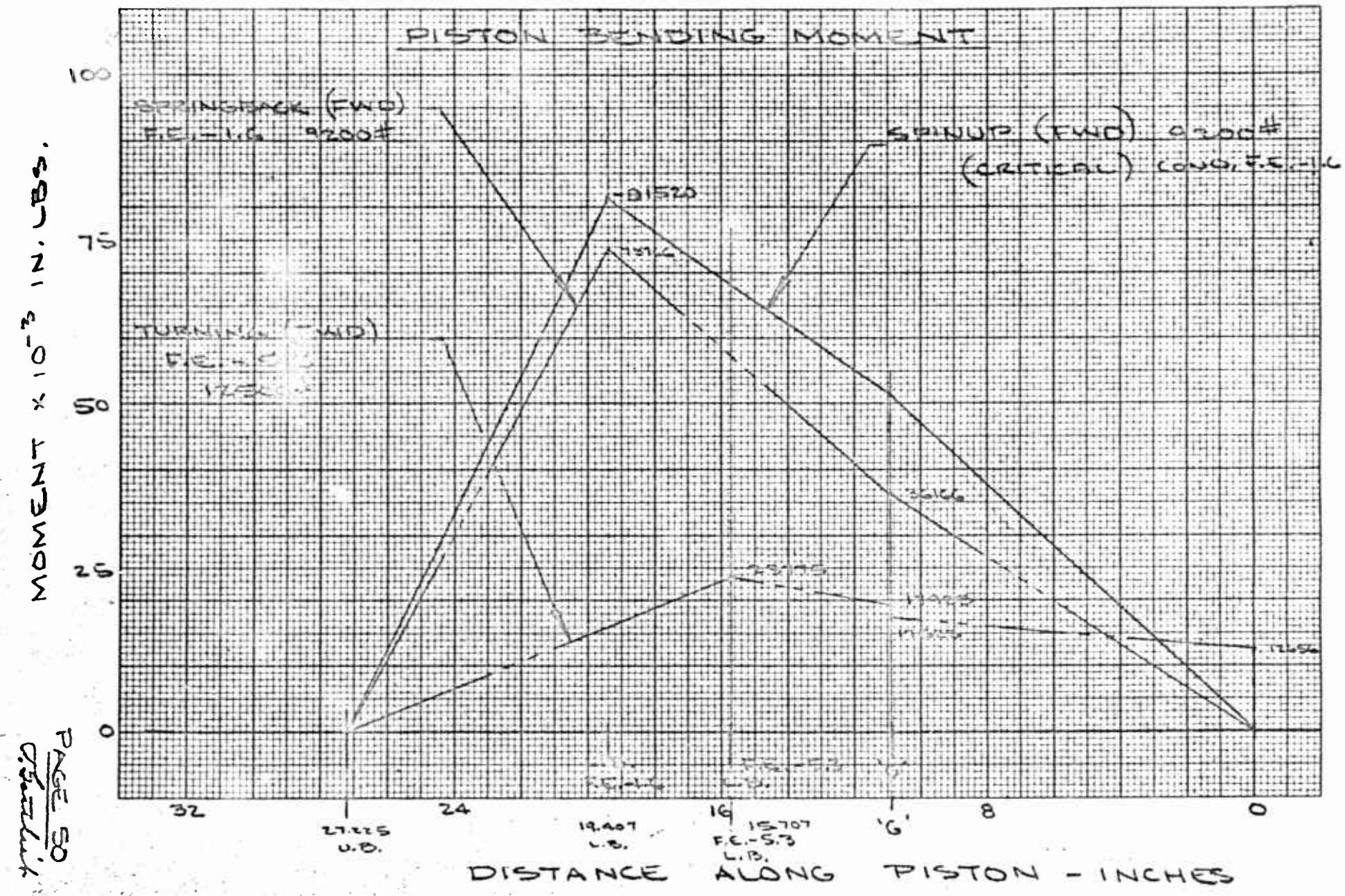
PISTON BENDING MOMENT
SPRINGBACK (FWD)
F.E.-1.6 9200#
SPINUP (FWD) 9200#
(CRITICAL) COND. F.E.-1.6
TURNING (FWD)
-81520
36166
12656
100
75
50
25
0
MOMENT x 10^-3 IN. LBS.
32
24
16
8
0
27.225
U.B.
19.407
L.B.
15.707
F.E.-5.3
L.B.
'G'
DISTANCE ALONG PISTON - INCHES

PAGE 50

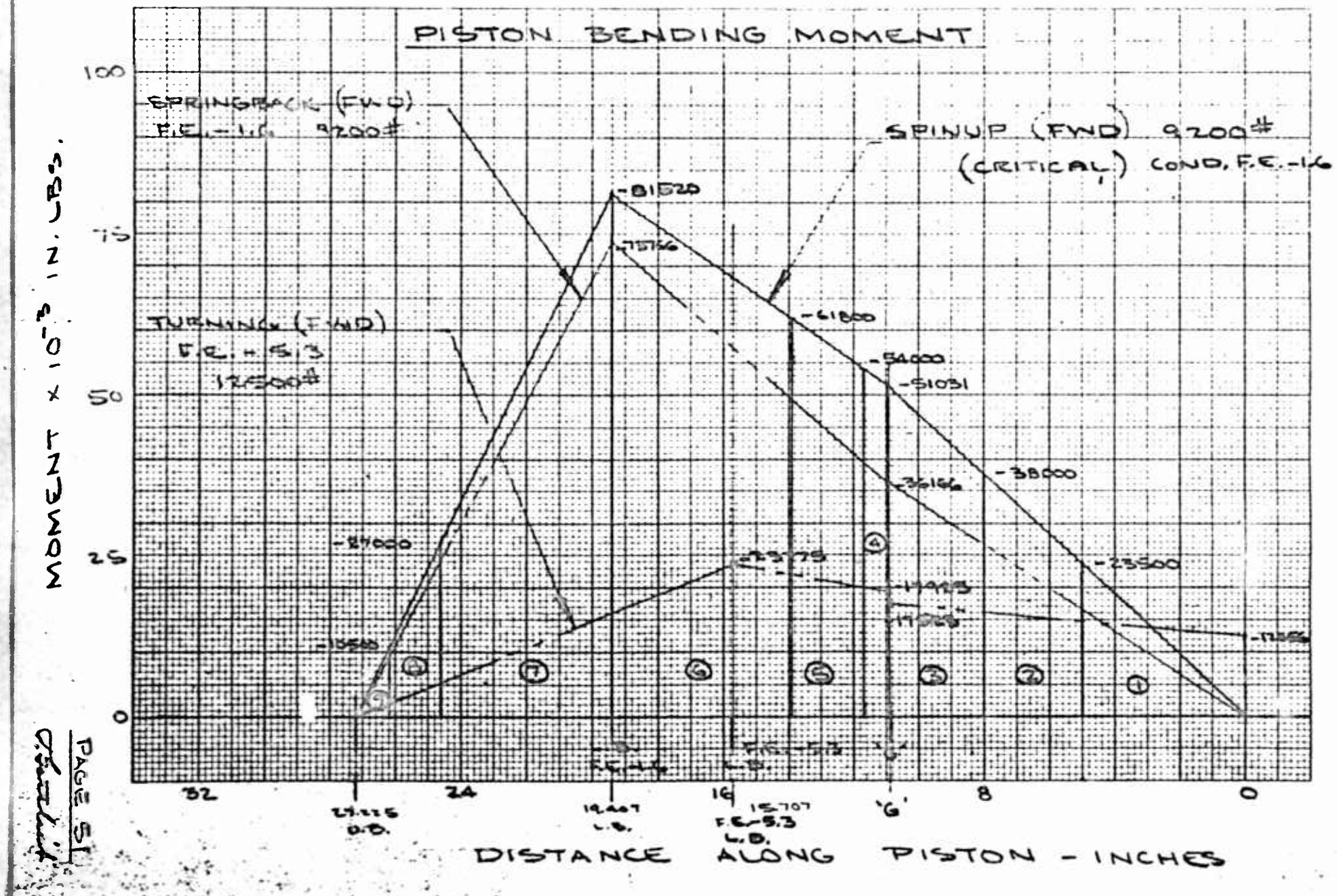
PISTON BENDING MOMENT
SPRINGBACK (FWD)
F.E. - 1.6 9200#
SPINUP (FWD) 9200#
(CRITICAL) COND. F.E. - 1.6
TURNING (FWD)
F.E. - 5.3
12500#
-81520
-75756
-61800
-54000
-51031
-38000
-36166
-23500
-27000
-10500
-23775
-17925
-17525
-12056
100
75
50
25
0
32
24
16
8
0
27.225
O.D.
19.407
L.B.
15.707
F.E.-5.3
L.B.
'G'
MOMENT x 10^-3 IN. LBS.
DISTANCE ALONG PISTON - INCHES

PAGE 51

INNER CYLINDER
INERTIA CALCULATIONS - CONT'D
TAKEN 3.333 IN. FROM ℄ AXLE

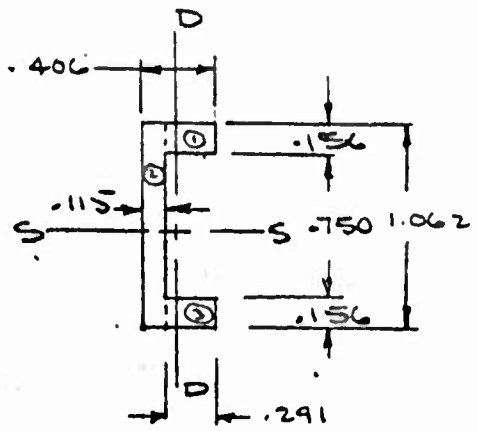

		A	D	S	AS	AD	AS²	AD²	I_{O-O}	I_{S-S}
1	.291X.156	.045	.984	.260	.0117	.0442	.0030	.0436	.00032	.00009
2	.115X1.062	.122	.531	.058	.0071	.0648	.0004	.0344	.00013	.01150
3	.291X.156	.045	.078	.260	.0117	.0035	.0030	.00027	.00032	.00009
	Σ	.212			.0305	.1125	.0064	.07827	.00077	.01168

$$\bar{S} = \frac{\Sigma AS}{\Sigma A} = \frac{.0305}{.212} = .1439$$

$$\bar{D} = \frac{\Sigma AD}{\Sigma A} = \frac{.1125}{.212} = .531$$

$$I_{S-S} = .01168 + .07827 - .531\,(.1125) = .03025 \text{ IN.}^4$$

$$I_{O-O} = .00077 + .0064 - .1439\,(.0305) = .0027 \text{ IN.}^4$$

CALC	Patchett		REVISED	DATE
CHECK				
APR				
APR				

NOSE GEAR XV5A — 15116
DEFLECTION ANALYSIS — RYAN
H. W. LOUD MACHINE WORKS, INC.
887 EAST SECOND ST., POMONA, CALIFORNIA
PAGE 52

INNER CYLINDER

INERTIA CALCULATIONS

TAKEN 10.50 IN. FROM ℄ AXLE – (9.566)

O.D. = 2.615	5.371	2.2954
I.D. = 2.290	4.119	1.3499
2t = .325	A = 1.252	I = .9445
t = .1625		

TAKEN 12.805IN. FROM ℄ AXLE USE 13.88

O.D. = 2.491	4.873	1.8900
I.D. = 2.290	4.119	1.3499
2t = .201	A = .754	I = .5401
t = .1005		

TAKEN 16.774IN. FROM ℄ AXLE

O.D. = 2.491	4.873	1.8900
I.D. = 2.251	3.980	1.2603
2t = .240	A = .893	I = .6297
t = .120		

CALC	Forchit		REVISED	DATE	NOSE GEAR XV5A	1511L
CHECK					DEFLECTION ANALYSIS	RYAN
APR					H. W. LOUD MACHINE WORKS, INC. 887 EAST SECOND ST., POMONA, CALIFORNIA	PAGE 53
APR						

INNER CYLINDER
INERTIA CALCULATIONS CONT'D

TAKEN 25.21 IN. FROM ℄ AXLE

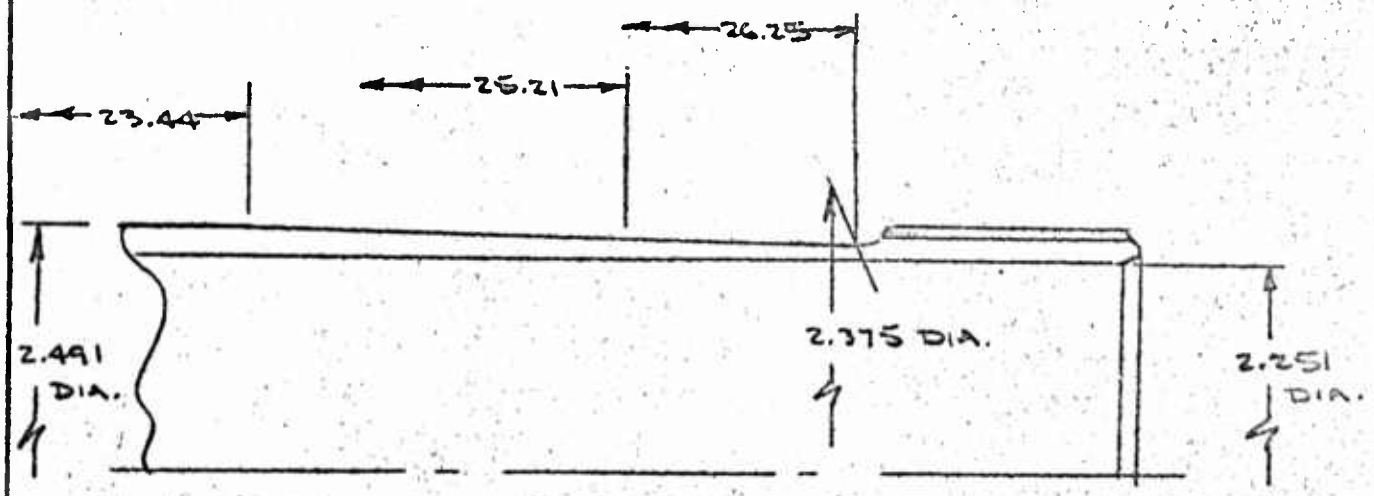

$$\Delta t = \frac{\frac{2.491 - 2.375}{2}}{26.25 - 23.44} \times (25.21 - 23.44) = .0365$$

$\therefore$ O.D. $= 2.491 - 2(.0365) = 2.418$

O.D. = 2.418	4.592		1.6780
I.D. = 2.251	3.980		1.2603
2t = .167	A = .612 IN.^{2}		I = .4177 IN.^{4}
t = .084			

TAKEN 26.25 IN. FROM ℄ AXLE

O.D. = 2.375	4.430		1.5637
I.D. = 2.251	3.980		1.2603
2t = .124	A = .450 IN.^{2}		I = .3034 IN.^{4}
t = .062			

CALC	[illegible]		REVISED	DATE	NOSE GEAR XVSA	1511L
CHECK					DEFLECTION ANALYSIS	RYAN
APR					H. W. LOUD MACHINE WORKS, INC. 887 EAST SECOND ST., POMONA, CALIFORNIA	PAGE 54
APR						

INNER CYLINDER 1511 L103 SPINUP (FWD) F.E

9200#

1	2	3	4	5	6	7	8	9	10
PANEL	Z POINT O TO L.H. EDGE	M (ULT) $\times 10^{-3}$	I	EI. $\times 10^{6}$	$\frac{M}{EI}$	L PANEL LENGTH	A $\times 10^{3}$ PANEL AREA	$\bar{z}$ CENTROID FROM R.H. EDGE	$z + \bar{z}$
				④ x 29	③/⑤		$\frac{(⑥_1 + ⑥_2)⑦}{2}$		② + (
1	0	0	2x.0303 .0605	1.755	0	5.00	30.475	3.333	3.3
		23.500			13.390				
2	5	23.500	2x.0545 .1190	3.451	6.810	3.00	26.732	1.620	6.62
		38.000			11.011				
3	8	38.000	.9445	27.391	1.387	2.95	4.794	1.549	TAKEA 10.5 9.54
		51.031			1.863				
4	10.95	51.031	.9445	27.391	1.863	.737	1.420	.375	11.3
		54.500			1.990				
5	11.687	54.500	.5401	15.663	3.480	2.188	8.137	1.118	12.8
		62.000			3.958				
6	13.875	62.000	.6297	18.261	3.395	5.532	21.738	2.899	16.77
		81.520			4.464				
7	19.407	81.520	.6297	18.261	4.464	5.213	15.493	2.169	21.5
		27.000			1.479				
8	24.62	27.000	.4177	12.113	2.229	1.630	2.523	.696	25.3
		10.500			.867				
9	26.25	10.500	.3034	8.799	1.193	.975	.582	.325	26.5
		0			0				

A

-1C3 SPINUP (FWD) F.E. -1.6

9200#

	6	7	8	9	10	11	12	13	14	15
6	M / EI	L PANEL LENGTH	A $\times 10^3$ PANEL AREA	$\bar{z}$ CENTROID FROM R.H. EDGE	$z + \bar{z}$	$A(z+\bar{z}) \times 10^3$	Σ $[A(z+\bar{z})]$	Σ A(SLOPE)	Σ ΣA	Δ WITH RESPECT TO PT. 0
29	(3)/(5)		$\frac{(6_1+6_2)(7)}{2}$		(2)+(9)	(8)×(10)	SUM (11) FROM BOTTOM	SUM (8) FROM BOTTOM	(2)×(13)	(12)+(14)
5	0 / 13.390	5.00	30.475	3.333	3.333	101.573	1.223	.112	0	1.223
51	6.810 / 11.011	3.00	26.732	1.620	6.620	176.966	1.121	.081	.405	.716
91	1.387 / 1.863	2.95	4.794	1.549	TAKE AT 10.50 9.549	45.778	.944	.055	.440	.504
91	1.863 / 1.990	.737	1.420	.375	11.325	16.082	.898	.050	.548	.350
63	3.480 / 3.958	2.188	8.137	1.118	12.805	104.194	.882	.048	.561	.321
61	3.395 / 4.464	5.532	21.738	2.899	16.774	364.633	.778	.040	.555	.223
61	4.464 / 1.479	5.243	15.493	2.169	21.576	334.277	.414	.018	.349	.065
13	2.229 / .867	1.630	2.523	.696	25.316	63.872	.079	.003	.074	.005
99	1.193 / 0	.975	.582	.325	26.575	15.467	.0161	.0006	[illegible]	[illegible]

B

INNER CYLINDER

INERTIA CALCULATIONS

TAKEN 8.0 FROM Ⓒ AXLE

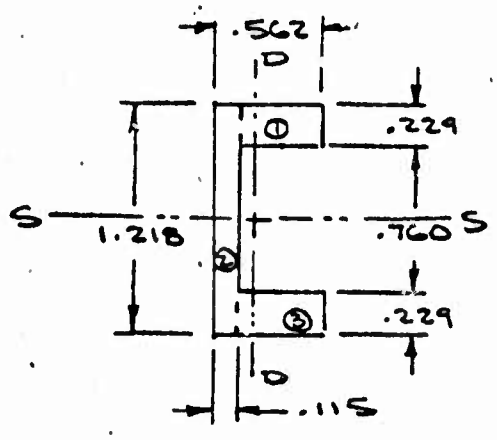

		A	D	S	AS	AD	AS^2	AD^2	$I_{o\,D-D}$	$I_{o\,S-S}$
1	.447x.229	.102	1.103	.339	.0346	.1125	.01170	.1241	.0017	.00045
2	.115x1.218	.140	.609	.058	.0081	.0853	.00047	.0519	.00015	.01735
3	.447x.229	.102	.115	.339	.0346	.0117	.01170	.0013	.0017	.00045
	Σ	.344			.0773	.2095	.02387	.1773	.00355	.01825

$$\bar{S} = \frac{\Sigma AS}{\Sigma A} = \frac{.0773}{.344} = .2247$$

$$\bar{D} = \frac{\Sigma AD}{\Sigma A} = \frac{.2095}{.344} = .6090$$

$$I_{s-s} = .01825 + .1773 - .6090\,(.2095)^{.1176} = .06795 \text{ IN.}^4$$

$$I_{D-D} = .00355 + .02387 - .2247\,(.0773)^{.0174} = .01000 \text{ IN.}^4$$

CALC			REVISED	DATE
CHECK				
APR				
APR				

NOSE GEAR XV5A — 1511L

DEFLECTION ANALYSIS — RYAN

H. W. LOUD MACHINE WORKS, INC.
887 EAST SECOND ST., POMONA, CALIFORNIA

PAGE 56

TABLE VI - MATRIX

BEARING REACTIONS

CALC			REVISED	DATE	NOSE GEAR XV5A	1511L
CHECK					DEFLECTION ANALYSIS	RYAN
APR					H. W. LOUD MACHINE WORKS, INC. 1137 EAST SECOND ST., POMONA, CALIFORNIA	PAGE 57
APR						

· BEARING REACTIONS

GENERAL MATRIX

CONDITION - ALL CONDITIONS

	Σ	V_o	D_o	S_o	MV_o	MD_o	MS_o
R_T				$-2.00/f$	$-1/f$		
R_{DUB}		$2.00/a$	b/a				$-1/a$
R_{SUB}				$\frac{b-2.00k/f}{a}$	$-k/fa$	$1/a$	
R_{DLB}		$-2.00/a$	$-\frac{27.225}{a}$				$1/a$
R_{SLB}				$\frac{2.0m}{fa}-\frac{27.225}{a}$	m/fa	$-1/a$	

CONDITION -

	Σ	V_o	D_o	S_o	MV_o	MD_o	MS_o
R_T							
R_{DUB}							
R_{SUB}							
R_{DLB}							
R_{SLB}							

			REVISED	DATE
CALC	[illegible]			
CHECK				
APR				
APR				

NOGE GEAR XVSA

H. W. LOUD MACHINE WORKS, INC.
887 EAST SECOND ST., POMONA, CALIFORNIA

1511L
RYAN
PAGE 58

BEARING REACTIONS

DETAILED MATRIX

CONDITION - F.E. -1.6

	Σ	V_o	D_o	S_o	M_{V_o}	M_{D_o}	M_{S_o}
R_T		0	0	-.269	-.134	0	0
R_{DUB}		.256	2.482	0	0	0	-.128
R_{SUB}		0	0	2.324	-.079	.128	0
R_{DLB}		-.256	-3.482	0	0	0	.128
R_{SLB}		0	0	-3.055	.213	-.128	

CONDITION -

	Σ	V_o	D_o	S_o	M_{V_o}	M_{D_o}	M_{S_o}
R_T							
R_{DUB}							
R_{SUB}							
R_{DLB}							
R_{SLB}							

			REVISED	DATE
CALC	Burchett			
CHECK				
APR				
APR				

NOSE GEAR XV5A

1511L

RYAN

H. W. LOUD MACHINE WORKS, INC.
867 EAST SECOND ST., POMONA, CALIFORNIA

BEARING REACTIONS

DETAILED MATRIX

CONDITION - F.E. - 5.3

	Σ	V_o	D_o	S_o	M_{V_o}	M_{D_o}	M_{S_o}
R_T		0	0	-.234	-.117	0	0
R_{DUB}		.174	1.364	0	0	0	-.087
R_{SUB}		0	0	1.289	-.038	.087	0
R_{DLB}		-.174	-2.364	0	0	0	.087
R_{SLB}		0	0	-2.054	.155	-.087	0

CONDITION -

	Σ	V_o	D_o	S_o	M_{V_o}	M_{D_o}	M_{S_o}
R_T							
R_{DUB}							
R_{SUB}							
R_{DLB}							
R_{SLB}							

			REVISED	DATE
CALC				
CHECK				
APR				
APR				

NOSE GEAR XV5A

H. W. LOUD MACHINE WORKS, INC.
137 EAST SECOND ST., POMONA, CALIFORNIA

1511L
RYAN
PAGE 60

BEARING REACTIONS

EXTENDED MATRIX

(FWD)

CONDITION - SPINUP F.E. -1.6

9200#

	Σ	V_o 5827	D_o 3600	S_o	M_{V_o}	M_{D_o}	M_{S_o}
R_T		0	0	0			
R_{DUB}	10427	1492	8935				
R_{SUB}		0	0				
R_{DLB}	-14027	-1492	-12535				
R_{SLB}		0	0	0			

(AFT)

CONDITION - SPINUP F.E. -1.6

9200#

EMERGENCY

	Σ	V_o 3132	D_o 1935	S_o	M_{V_o}	M_{D_o}	M_{S_o}
R_T		0	0	0			
R_{DUB}	5605	802	4803				
R_{SUB}		0	0				
R_{DLB}	-7540	-802	-6738				
R_{SLB}		0	0	0			

			REVISED	DATE
CALC	Brahi			
CHECK				
APR				
APR				

NOSE GEAR XV5A

1511L

RYAN

H W LOUD MACHINE WORKS, INC
887 EAST SECOND ST. POMONA, CALIFORNIA

BEARING REACTIONS

EXTENDED MATRIX

(FWD)

CONDITION - SPINUP F.E. - 1.6

12500#

	Σ	V_o 3238	D_o 2001	S_o	M_{V_o}	M_{D_o}	M_{S_o}
R_T		0	0	0			
R_{DUB}	5795	829	4966				
R_{SUB}		0	0				
R_{DLB}	-7796	-829	-6967				
R_{SLB}		0	0	0			

(FWD)

CONDITION - SPRINGBACK F.E. -1.6

9200#

	Σ	V_o 6205	D_o -4441	S_o	M_{V_o}	M_{D_o}	M_{S_o}
R_T		0	0	0			
R_{DUB}	-9435	1588	-11023				
R_{SUB}		0	0				
R_{DLB}	13876	-1588	15464				
R_{SLB}		0	0	0			

CALC		REVISED	DATE	NOSE GEAR XVSA
CHECK				
APR				
APR				
				H. W. LOUD MACHINE WORKS, INC. 807 EAST SECOND ST., POMONA, CALIFORNIA

1511L
RYAN
PAGE 62

BEARING REACTIONS

EXTENDED MATRIX

(AFT)

CONDITION - SPRING BACK F.E. - 1.6

9200#

EMERGENCY

	Σ	V_o 3199	D_o -2242	S_o	M_{V_o}	M_{D_o}	M_{S_o}
R_T		0	0	0			
R_{DUB}	-4746	819	-5565				
R_{SUB}		0	0				
R_{DLB}	6988	-819	7807				
R_{SLB}		0	0	0			

(FWD)

CONDITION - SPRING BACK F.E. - 1.6

12500#

	Σ	V_o 3192	D_o -2438	S_o	M_{V_o}	M_{D_o}	M_{S_o}
R_T		0	0	0			
R_{DUB}	-5234	817	-6051				
R_{SUB}		0	0				
R_{DLB}	7672	-817	8489				
R_{SLB}		0	0	0			

			REVISED	DATE
CALC	Litchfield			
CHECK				
APP				
APP				

NOSE GEAR XVSA

1511L

RYAN

H. W. LOUD MACHINE WORKS, INC.
697 EAST SECOND ST., POMONA, CALIFORNIA

PAGE C-3

BEARING REACTIONS

EXTENDED MATRIX

(FWD)

CONDITION - MAX. VERTICAL F.E. -1.6

9200#

	Σ	V_o 6342	D_o 1009	S_o	M_{V_o}	M_{D_o}	M_{S_o}
R_T		0	0	0			
$R_{D_{UB}}$	4128	1624	2504				
$R_{S_{UB}}$		0	0				
$R_{D_{LB}}$	-5137	-1624	-3513				
$R_{S_{LB}}$		0	0	0			

(FWD)

CONDITION - MAX. VERTICAL , F.E. -1.6

12500#

	Σ	V_o 3263	D_o 519	S_o	M_{V_o}	M_{D_o}	M_{S_o}
R_T		0	0	0			
$R_{D_{UB}}$	2123	835	1288				
$R_{S_{UB}}$		0	0				
$R_{D_{LB}}$	-2642	-835	-1807				
$R_{S_{LB}}$		0	0	0			

CALC			REVISED	DATE	NOSE GEAR XVSA	1511L
CHECK						RYAN
APR						
APR					H W LOUD MACHINE WORKS, INC	PAGE
					117 EAST SECOND ST, POMONA, CALIFORNIA	64

BEARING REACTIONS

EXTENDED MATRIX

(AFT)

CONDITION - MAXIMUM VERTICAL F.E. -1.6

9200 #
EMERGENCY

	Σ	V_o 3270	D_o 520	S_o	M_{V_o}	M_{D_o}	M_{S_o}
R_T		0	0	0			
R_{DUB}	2128	837	1291				
R_{SUB}		0	0				
R_{DLB}	-2648	-837	-1811				
R_{SLB}		0	0	0			

(AFT)

CONDITION - VTOL MAX. VERTICAL F.E. -1.6

9200#
EMERGENCY

	Σ	V_o 8448	D_o -739	S_o	M_{V_o}	M_{D_o}	M_{S_o}
R_T		0	0	0			
R_{DUB}	329	2163	-1834				
R_{SUB}		0	0				
R_{DLB}	410	-2163	2573				
R_{SLB}		0	0	0			

			REVISED	DATE
CALC				
CHECK				
APR				
APR				

MOSE GEAR XV5A

1511L

RYAN

H. W. LOUD MACHINE WORKS, INC.
887 EAST SECOND ST., POMONA, CALIFORNIA

BEARING REACTIONS

EXTENDED MATRIX

(FWD)

CONDITION – UNSYMM. BRAKING F.E.–5.3

12500#

	Σ	V_o 4876	D_o -427	S_o 1105	M_{V_o}	M_{D_o} 8730	M_{S_o}
R_T	-259	0	0	-259	0	0	0
R_{DUB}	266	848	-582	0		0	
R_{SUB}	2184	0	0	1424		760	
R_{DLB}	161	-848	1009	0		0	
R_{SLB}	-3030	0	0	-2270	0	-760	0

(FWD)

CONDITION – TURNING F.E.–5.3

12500#

	Σ	V_o 3193	D_o -279	S_o 1602	M_{V_o}	M_{D_o} 12656	M_{S_o}
R_T	-375	0	0	-375	0	0	0
R_{DUB}	175	55	-381	0		0	
R_{SUB}	3166	0	0	2065		1101	
R_{DLB}	104	-556	660	0		0	
R_{SLB}	-4392	0	0	-3291	0	-1101	0

			REVISED	DATE
CALC				
CHECK				
APR				
APR				

NOSE GEAR XV5A

1511L

RYAN

H. W. LOUD MACHINE WORKS, INC.
687 EAST SECOND ST., POMONA, CALIFORNIA

BEARING REACTIONS

EXTENDED MATRIX

(AFT)

CONDITION – UNSYMMETRICAL BRAKING F.E.-5.3

9200#

	Σ	V_o 4171	D_o -365	S_o 637	M_{V_o}	M_{D_o} 5032	M_{S_o}
R_T	-149	0	0	-149	0	0	0
$R_{D_{UB}}$	228	726	-498	0		0	
$R_{S_{UB}}$	1259	0	0	821		438	
$R_{D_{LB}}$	137	-726	863	0		0	
$R_{S_{LB}}$	-1746	0	0	-1308	0	-438	0

(AFT)

CONDITION – TURNING F.E.-5.3

9200#

	Σ	V_o 3198	D_o -280	[illegible] 1380	M_{V_o}	[illegible] 10402	M_{S_o}
R_T	-323	0	0	-323	0	0	0
$R_{D_{UB}}$	174	556	-382	0		0	
$R_{S_{UB}}$	2727	0	0	1779		948	
$R_{D_{LB}}$	106	-556	662	0		0	
$R_{S_{LB}}$	-3783	0	0	-2835	0	-948	0

CALC	[illegible]		REVISED	DATE	NOSE GEAR XV5A	1511L
CHECK						RYAN
APR					H. W. LOUD MACHINE WORKS, INC. 837 EAST SECOND ST., POMONA, CALIFORNIA	PAGE 67
APR						

BEARING REACTIONS

EXTENDED MATRIX

(FWD)

CONDITION - 3PT BRAKED ROLL F.E. - 5.3

12500 #

	Σ	V_o 3193	D_o -279	S_o	M_{V_o}	M_{D_o}	M_{S_o}
R_T		0	0	0			
R_{DUB}	175	556	-381				
R_{SUB}		0	0				
R_{DLB}	104	-556	660				
R_{SLB}		0	0	0			

(AFT)

CONDITION - 3PT BRAKED ROLL F.E. - 5.3

9200 #

	Σ	V_o 3835	D_o -336	S_o	M_{V_o}	M_{D_o}	M_{S_o}
R_T		0	0	0			
R_{DUB}	209	667	-458				
R_{SUB}		0	0				
R_{DLB}	127	-667	794				
R_{SLB}		0	0	0			

CALC			REVISED	DATE
CHECK				
APR				
APR				

NOSE GEAR XV5A

1511L

RYAN

H. W. LOUD MACHINE WORKS, INC.
537 EAST SECOND ST., POMONA, CALIFORNIA

CYLINDER REACTIONS

GENERAL EQUATIONS

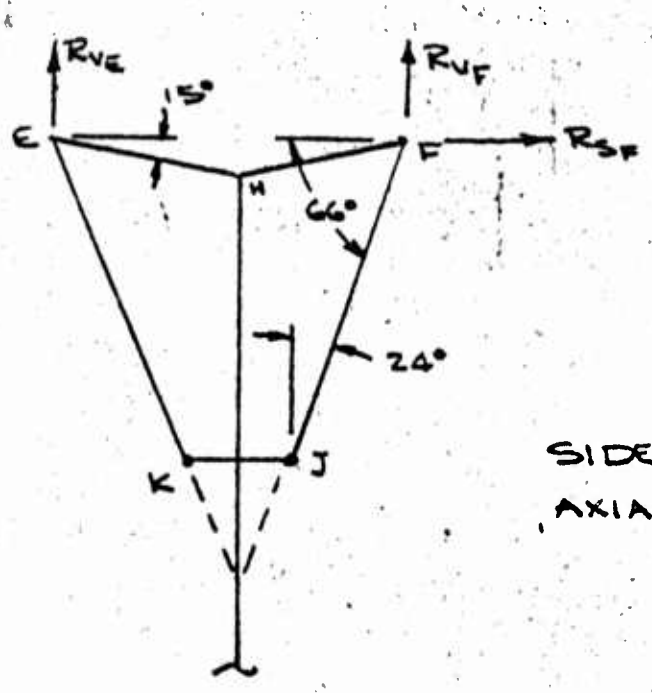

$\sin 15° = .2588$

$\cos 15° = .9659$

$\sin 66° = .9135$

$\cos 66° = .4067$

SIDE BRACES WILL BE ASSUMED AXIAL LOADED AS FOLLOWS:

$$R_{VF} - R_{FH} \sin 15° - R_{FJ} \sin 66° = 0$$

$$R_{SF} - R_{FH} \cos 15° - R_{FJ} \cos 66° = 0$$

$$-.2588\,R_{FH} - .9135\,R_{FJ} + R_{VF} = 0$$

$$-.9659\,R_{FH} - .4067\,R_{FJ} + R_{SF} = 0$$

$$-.2500\,R_{FH} - .8823\,R_{FJ} + .9659\,R_{VF}$$

$$-.2500\,R_{FH} - .1053\,R_{FJ} + .2588\,R_{SF}$$

$$-.7770\,R_{FJ} + .9659\,R_{VF} - .2588\,R_{SF}$$

$$R_{FJ} = \frac{.9659\,R_{VF} - .2588\,R_{SF}}{.7770}$$

$$R_{FJ} = 1.243\,R_{VF} - .333\,R_{SF}$$

CALC			REVISED	DATE
CHECK				
APR				
APR				

NOSE GEAR XVSA — 1511L

DEFLECTION ANALYSIS — RYAN

H. W. LOUD MACHINE WORKS, INC.
657 EAST SECOND ST., POMONA, CALIFORNIA

PAGE 69

CYLINDER REACTIONS

GENERAL EQUATIONS - CONT'D

$$R_{FJ} = 1.243\left[-.5565\,V_o - .0608\,(c)\,S_o - .0282\,(c)\,D_o - .0608\,M_{D_o} + .0282\,M_{S_o}\right] - .333\,R_{SF}$$

$$R_{FJ} = -.6917\,V_o - .0756\,(c)\,S_o - .0350\,(c)\,D_o - .0756\,M_{D_o} + .035\,(c)\,M_{S_o} - .333\,(-S_o)$$

$$R_{FJ} = -.6917\,V_o + \left[.333 - .0756\,(c)\right]S_o - .0350\,(c)\,D_o - .0756\,M_{D_o} + .0350\,(c)\,M_{S_o}$$

$$\begin{array}{l} -\ .1053\,R_{FH} - .3715\,R_{FJ} + .4067\,R_{VF} \\ \pm\ .8823\,R_{FH} - .3715\,R_{FJ} + .9135\,R_{SF} \\ \hline .7770\,R_{FH} \qquad\qquad + .4067\,R_{VF} - .9135\,R_{SF} \end{array}$$

$$R_{FH} = \frac{-.4067\,R_{VF} + .9135\,R_{SF}}{.7770}$$

$$R_{FH} = -.5234\,R_{VF} + 1.1757\,R_{SF}$$

$$R_{FH} = -.5234\left[-.5565\,V_o - .0608\,(c)\,S_o - .0282\,(c)\,D_o - .0608\,M_{D_o} + .0282\,M_{S_o}\right] + 1.1757\,R_{SF}$$

$$R_{FH} = .2913\,V_o + .0318\,(c)\,S_o + .0148\,(c)\,D_o + .0318\,M_{D_o} - .0148\,M_{S_o} + 1.1757\,(-S_o)$$

CALC	[illegible]		REVISED	DATE	NOSE GEAR XV5A	15111
CHECK					DEFLECTION ANALYSIS	RYAN
APR					H. W. LOUD MACHINE WORKS, INC. 887 EAST SECOND ST., POMONA, CALIFORNIA	PAGE 70
APR						

CYLINDER REACTIONS

GENERAL EQUATIONS - CONT'D

$$R_{FH} = .2913\,V_o + [.0318(C) - 1.1757]\,S_o + .0148(C)\,D_o + .0318\,M_{D_o} - .0148\,M_{S_o}$$

$$R_{EK} = 1.243\,R_{VE}$$

$$= 1.243[-.5565\,V_o + .0608(C)\,S_o - .0282(C)\,D_o + .0608\,M_{D_o} + .0282\,M_{S_o}]$$

$$R_{EK} = -.6917\,V_o + .0756(C)\,S_o - .0350(C)\,D_o + .0756\,M_{D_o} + .0350\,M_{S_o}$$

$$R_{EH} = -.5234\,R_{VE}$$

$$R_{EH} = -.5234[-.5565\,V_o + .0608(C)\,S_o - .0282(C)\,D_o + .0608\,M_{D_o} + .0282\,M_{S_o}]$$

$$R_{EH} = .2913\,V_o - .0318(C)\,S_o + .0148(C)\,D_o - .0318\,M_{D_o} - .0148\,M_{S_o}$$

CALC	[illegible]		REVISED	DATE	NOSE GEAR XV5A	1511L
CHECK					DEFLECTION ANALYSIS	RYAN
APR					H. W. LOUD MACHINE WORKS, INC. 887 EAST SECOND ST., POMONA, CALIFORNIA	PAGE 71
APR						

CYLINDER BENDING MOMENT

GENERAL EQUATIONS

$$M_{S_{LB}} = M_{D_{LB}} = 0$$

$$M_{S_C-} = -2.56\, R_{D_{LB}}$$

$$M_{S_C+} = -2.56\, R_{D_{LB}} + 3.50\, P_{V_{BD}}$$
$$= -2.56\, R_{D_{LB}} + 3.50\,(.7201\, P_{BD})$$
$$= -2.56\, R_{D_{LB}} + 2.520\, P_{BD}$$

$$M_{S_L-} = -4.343\, R_{D_{LB}} + 3.50\, P_{V_{BD}} - .1783\, P_{D_{BD}}$$
$$= -4.343\, R_{D_{LB}} + 3.50\,(.7201\, P_{BD}) - 1.783\,(-.6939\, P_{BD})$$
$$= -4.343\, R_{D_{LB}} + 3.757\, P_{BD}$$

$$M_{S_L+} = M_{S_L-} = -4.343\, R_{D_{LB}} + 3.757\, P_{BD}$$

$$M_{S_{UB}} = -a\, R_{D_{LB}} + 3.50\, P_{V_{BD}} - (a - 2.56)\, P_{D_{BD}}$$
$$-(a - 4.343)\, P_{DOOR}$$
$$= -a\, R_{D_{LB}} + 2.520\, P_{BD} - (a - 2.56)(-.6939\, P_{BD})$$
$$-(a - 4.343)\, P_{DOOR}$$
$$= -a\, R_{D_{LB}} + 2.520\, P_{BD}$$
$$-(-.6939\, a\, P_{BD} + 1.776\, P_{BD})$$
$$-(a - 4.343)\, P_{DOOR}$$
$$= -a\, R_{D_{LB}} + 2.520\, P_{BD} + .6939\, a\, P_{BD}$$
$$-1.776\, P_{BD} - (a - 4.343)\, P_{DOOR}$$

CALC	[illegible]		REVISED	DATE	NOSE GEAR XV5A	1511L
CHECK					DEFLECTION ANALYSIS	RYAN
APR					H. W. LOUD MACHINE WORKS, INC. 887 EAST SECOND ST., POMONA, CALIFORNIA	PAGE 72
APR						

CYLINDER BENDING MOMENT

GENERAL EQUATIONS - CONT'D

$$M_{SUB} = -a R_{D_{LB}} + (.744 + .6939a) P_{BD} - (a - 4.343) P_{DOOR}$$

$$M_{SM} = -(1.730 + 2.56) R_{D_{LB}} + 3.50 P_{V_{BD}} - 1.730 P_{D_{BD}} + (.970 + 1.730) R_{DN}$$

$$M_{SM} = -4.290 R_{D_{LB}} + .7201 (3.50) P_{BD} - 1.730 (-.6939 P_{BD}) + 2.700 R_{DN}$$

$$R_{DN} = 0$$

$$M_{SM} = -4.290 R_{D_{LB}} + 3.721 P_{BD}$$

$$M_{SN-} = -1.590 R_{D_{LB}}$$

$$M_{SN+} = M_{SN-} = -1.590 R_{D_{LB}}$$

CALC	[signature]		REVISED	DATE	NOSE GEAR XV5A	1511L
CHECK					DEFLECTION ANALYSIS	RYAN
APR					H. W. LOUD MACHINE WORKS, INC. 887 EAST SECOND ST., POMONA, CALIFORNIA	PAGE 73
APR						

CYLINDER BENDING MOMENT

GENERAL EQUATIONS- CONT'D

$$M_{SEF} = -(a+d)R_{DLB} + 3.50P_{VBD} - (a+d-2.56)P_{DBD} - (a+d-4.343)P_{DOOR} - dR_{DUB}$$

$$= -(a+d)R_{DLB} + 2.520P_{BD} - [(a+d-2.56)(-.6939P_{BD}] - (a+d-4.343)P_{DOOR} - dR_{DUB}$$

$$= -(a+d)R_{DLB} + 2.520P_{BD} - (-.6939aP_{BD} - .6939dP_{BD} + 1.776P_{BD}) - (a+d-4.343)P_{DOOR} - dR_{DUB}$$

$$= -(a+d)R_{DLB} + (.744 + .6939a + .6939d)P_{BD} - (a+d-4.343)P_{DOOR} - dR_{DUB}$$

CALC			REVISED	DATE	NOSE GEAR XV5A	1511L
CHECK					DEFLECTION ANALYSIS	RYAN
APR						
APR					H. W. LOUD MACHINE WORKS, INC. 607 EAST SECOND ST., POMONA, CALIFORNIA	PAGE 74

CYLINDER BENDING MOMENT
GENERAL EQUATIONS - CONT'D

5)

$$1.730 + .970\ R_{SN} + (3.852 + j)\ R_T = 0$$

$$R_{SN} = \frac{-(3.852 + j) R_T}{2.700} = -1.427\ R_T - .370\ j\ R_T$$

$$\underline{R_{SN} = (-1.427 - .370\ j)\ R_T}$$

$$-2.700\ R_{SM} + (1.152 + j)\ R_T = 0$$

$$R_{SM} = \frac{(1.152 + j) R_T}{2.700} = .427\ R_T + .370\ j\ R_T$$

$$\underline{R_{SM} = (.427 + .370\ j)\ R_T}$$

CALC	[illegible]		REVISED	DATE
CHECK				
APR				
APR				

NOSE GEAR XV5A — 1511L

DEFLECTION ANALYSIS — RYAN

W. LOUD MACHINE WORKS, INC.
CO. EAST SECOND ST., POMONA, CALIFORNIA

CYLINDER BENDING MOMENT
GENERAL EQUATIONS – CONT'D

$$M_{D_N} = 1.590\, R_{S_{LB}}$$

$$M_{D_C} = 2.56\, R_{S_{LB}} + [-R_{S_N}]$$
$$= 2.56\, R_{S_{LB}} + (1.427 + .370\, j)\, R_T$$

$$M_{D_M} = (2.56 + 1.730)\, R_{S_{LB}} - (3.852 + j)\, R_T$$

$$M_{D_{L-}} = 4.343\, R_{S_{LB}} + (4.343 - .438 + j)\, R_T$$

$$M_{D_{L+}} = 4.343\, R_{S_{LB}} + (4.343 - .438 + j)\, R_T + 2.43\, R_{F_J} \cos 24^\circ - 2.43\, R_{EK} \cos 24^\circ$$
$$= 4.343\, R_{S_{LB}} + (3.905 + j)\, R_T + 2.220\, R_{F_J} - 2.220\, R_{EK}$$

$$M_{D_{JB}} = a\, R_{S_{LB}} + (a - .438 + j)\, R_T + 2.220\, R_{F_J} - 2.220\, R_{EK} + (a - 4.343)\, R_{F_J} \overset{.4067}{\sin} 24^\circ - (a - 4.343)\, R_{EK} \overset{.4067}{\sin} 24^\circ$$
$$= a\, R_{S_{LB}} + (a - .438 + j)\, R_T + (.4067\, a + .454)\, R_{F_J} + (-.454 - .4067\, a)\, R_{EK}$$

CALC	Bechtel		REVISED	DATE	NOSE GEAR XVSA	1511L
CHECK					DEFLECTION ANALYSIS	RYAN
APR					H. W. LOUD MACHINE WORKS, INC. 887 EAST SECOND ST., POMONA, CALIFORNIA	PAGE 76
APR						

CYLINDER BENDING MOMENT
GENERAL EQUATIONS – CONT'D

$$M_{DEF-} = (a+d)\,R_{SLB} + d\,R_{SUB} + (17.34 - .438 + j)\,R_T + 2.43\,R_{FJ}\cos 24^\circ - 2.43\,R_{EK}\cos 24^\circ + 13.00\,R_{FJ}\sin 24^\circ - 13.00\,R_{EK}\sin 24^\circ$$

$$= (a+d)\,R_{SLB} + d\,R_{SUB} + (16.902 + j)\,R_T + 2.22\,R_{FJ} - 2.22\,R_{EK} + 5.287\,R_{FJ} - 5.287\,R_{EK}$$

$$= (a+d)\,R_{SLB} + d\,R_{SUB} + (16.902 + j)\,R_T + 7.507\,R_{FJ} - 7.507\,R_{EK}$$

$$M_{DEF+} = (a+d)\,R_{SLB} + d\,R_{SUB} - 8.22\,R_{VE} + 8.22\,R_{VF} + (17.34 - .438 + j)\,R_T$$

$$= (a+d)\,R_{SLB} + d\,R_{SUB} - 8.22\,R_{VE} + 8.22\,R_{VF} + (16.902 + j)\,R_T$$

CALC			REVISED	DATE
CHECK				
APR				
APR				

NOSE GEAR XV5A — 1511L
DEFLECTION ANALYSIS — RYAN
H. W. LOUD MACHINE WORKS, INC.
207 EAST SECOND ST., POMONA, CALIFORNIA
PAGE 77

CYLINDER REACTIONS

DUE TO DOOR MOMENT ABOUT PIVOT POINT FROM AIR LOADS. TO BE ADDED WHERE CRITICAL ONLY

$M_{EF} = -3740$ IN. LBS.

$M_{EF} + 12.76\, P_{DB} = 0$

$P_{BD} = 292$ LBS.

$P_{VBD} = 292 \cos 43.94° = 292 \times .7201 = 210$ LBS

$P_{DBD} = -292 \sin 43.94° = -292 \times .6940 = -203$ LBS

$R_{VE} = -.500\, P_{VBD} = -105$ LBS

$R_{DE} = -.500\, P_{DBD} = 102$ LBS

$R_{VF} = -.500\, P_{VBD} = -105$ LBS

$R_{DF} = -.500\, P_{DBD} = 102$ LBS

$R_{FJ} = 1.243\, R_{VF} = -131$ LBS

$R_{FH} = -.5234\, R_{VF} = 55$ LBS

$R_{EK} = 1.243\, R_{VE} = -131$ LBS

$R_{EH} = -.5234\, R_{VE} = 55$ LBS

$R_{SEF} = 0$

DOOR ATTACH LOAD

$P_{DOOR} = 3740/12.50 = 300$ LBS.

CALC	Bartlett		REVISED	DATE	NOSE GEAR XV5A	1511L
CHECK					DEFLECTION ANALYSIS	RYAN
APR					H. W. LOUD MACHINE WORKS, INC. 887 EAST SECOND ST., POMONA, CALIFORNIA	PAGE 78
APR						

TABLE VII - MATRIX

CYLINDER REACTIONS

CALC			REVISED	DATE
CHECK				
APR				
APR				

NOSE GEAR XVSA — 1511L

DEFLECTION ANALYSIS — RYAN

H. W. LOUD MACHINE WORKS, INC.
367 EAST SECOND ST., POMONA, CALIFORNIA

CYLINDER REACTIONS

GENERAL MATRIX

CONDITION - ALL CONDITIONS

	Σ	V_o	D_o	S_o	M_{V_o}	M_{D_o}	M_{S_o}
P_{DB}		.1568	.0783(C)				-.0783
P_{VDB}		.1129	.0564(C)				-.0564
P_{DDB}		-.1088	-.0543(C)				.0543
R_{VE}		-.5565	-.0282(C)	.0608(C)		.0608	.0282
R_{DE}		.0544	.0272(C) -.500	-.1217	-.0608		-.0272
R_{VF}		-.5565	-.0282(C)	-.0608(C)		-.0608	.0282
R_{DF}		.0544	.0272(C) -.500	.1217	.0608		-.0272
R_{SEF}				-1.00			
R_{FJ}		-.6917	-.0350(C)	.333 -.0756(C)		-.0756	.0350
R_{FH}		.2913	.0148(C)	.0318(C) -1.1757		.0318	-.0148
R_{EK}		-.6917	-.0350(C)	.0756(C)		.0756	.0350
R_{EH}		.2913	.0148(C)	-.0318(C)		-.0318	-.0148

CALC	[signature]		REVISED	DATE	NOSE GEAR XV5A	1511L
CHECK						RYAN
APR					H W LOUD MACHINE WORKS, INC 887 EAST SECOND ST POMONA, CALIFORNIA	PAGE 80
APR						

CYLINDER REACTIONS

DETAILED MATRIX

C = 36.75

CONDITION - CONDITION F.E.-1.6

	Σ	V_o	D_o	S_o	MV_o	MD_o	MS_o
P_{DB}		.1568	2.8775				-.0783
P_{VDB}		.1129	2.0727				-.0564
P_{DDB}		-.1088	-1.9955				.0543
R_{VE}		-.5565	-1.0364	2.2344		.0608	.0282
R_{DE}		.0544	.4996	-.1217	-.0608		-.0272
R_{VF}		-.5565	-1.0364	-2.2344		-.0608	.0282
R_{DF}		.0544	.4996	.1217	.0608		-.0272
R_{SEF}				-1.00			
R_{FJ}		-.6917	-1.2863	-2.4453		-.0756	.0350
R_{FH}		.2913	.544	-.007		.0318	-.0148
R_{EK}		-.6917	-1.2863	2.7783		.0756	.0350
R_{EH}		.2913	.544	-1.1687		-.0318	-.0148

			REVISED	DATE
CALC				
CHECK				
APR				
APR				

NOSE GEAR XVSA

1511L

RYAN

H. W. LOUD MACHINE WORKS, INC
887 EAST SECOND ST. POMONA, CALIFORNIA

PAGE 81

CYLINDER REACTIONS

DETAILED MATRIX

C = 33.05

CONDITION - F.E. - 5.3 (STATIC)

	Σ	V_o	D_o	S_o	MV_o	HD_o	MS_o
P_{DB}		.1568	2.5878				-.0783
P_{VDB}		.1129	1.8640				-.0564
P_{DDB}		-.1088	-1.7946				.0543
R_{VE}		-.5565	-.9320	2.0094		.0608	.0282
R_{DE}		.0544	.3990	-.1217	-.0608		-.0272
R_{VF}		-.5565	-.9320	-2.0094		-.0608	.0282
R_{DF}		.0544	.3990	.1217	.0608		-.0272
R_{SEF}				-1.00			
R_{FJ}		-.6917	-1.1568	-2.1656		-.0756	.035
R_{FH}		.2913	.4891	-.1248		.0318	-.0148
R_{EK}		-.6917	-1.1568	2.4986		.0756	.035
R_{EH}		.2913	.4891	-1.0510		.0318	-.0148

CALC	Barthel		REVISED	DATE	NOSE GEAR XV5A	15H L
CHECK						RYAN
APR					H. W. LOUD MACHINE WORKS, INC. 937 EAST SECOND ST., POMONA, CALIFORNIA	PAGE 82
APR						

CYLINDER REACTIONS

EXTENDED MATRIX

CONDITION - SPINUP (FWD) F.E. -1.6

9200#

		V_o	D_o	S_o	MV_o	HD_o	MS_o
	Σ	5827	3600				
P_{DB}	11273	914	10359				
P_{VDB}	8120	658	7462				
P_{DDB}	-7818	-634	-7184				
R_{VE}	-6974	-3243	-3731				
R_{DE}	2116	317	1799				
R_{RF}	-6974	-3243	-3731				
R_{DF}	2116	317	1799				
R_{SEF}	.0	0	0				
R_{FJ}	-8662	-4031	-4631				
R_{FH}	3655	1697	1958				
R_{EK}	-8662	-4031	-4631				
R_{EH}	3655	1697	1958				

			REVISED	DATE
CALC	Pitchik			
CHECK				
APR				
APR				

NOSE GEAR XVSA

1511L

RYAN

H W LOUD MACHINE WORKS, INC
887 EAST SECOND ST POMONA, CALIFORNIA

CYLINDER REACTIONS

CONDITION - SPINUP (FWD) F.E. -1.6 (9200 #)

SUMMARY

	DUE TO DOOR LOADS	EXTENDED MATRIX	Σ
P_{DB}	292	11273	11565
P_{VBD}	210	8120	8330
P_{DBD}	-203	-7818	-8021
R_{VE}	-105	-6974	-7079
R_{DE}	102	2116	2218
R_{VF}	-105	-6974	-7079
R_{DF}	102	2116	2218
R_{SEF}	0	0	0
R_{FJ}	-131	-8622	-8793
R_{FH}	55	3655	3710.
R_{EK}	-131	-8622	-8793
R_{EH}	55	3655	3710.

			REVISED	DATE	NOSE GEAR XV5A	1511L
CALC						RYAN
CHECK						
APR					H. W. LOUD MACHINE WORKS, INC. 887 EAST SECOND ST., POMONA, CALIFORNIA	PAGE 84
APR						

CYLINDER REACTIONS

EXTENDED MATRIX

CONDITION - SPINUP (AFT) F.E. - 1.6
9200# EMERGENCY

		V_o	D_o	S_o	M_{V_o}	M_{D_o}	M_{S_o}
	Σ	3132	1935				
P_{DB}	6059	491	5568				
P_{VDB}	4365	354	4011				
P_{DDB}	-4202	-341	-3861				
R_{VE}	-3748	-1743	-2005				
R_{DE}	1137	170	967				
R_{VF}	-3748	-1743	-2005				
R_{DF}	1137	170	967				
R_{SEF}							
R_{FJ}	-4655	-2166	-2489				
R_{FH}	1965	912	1053				
R_{EK}	-4655	-2166	-2489				
R_{EH}	1965	912	1053				

CALC	[signature]		REVISED	DATE	NOSE GEAR XV5A	1511L
CHECK						RYAN
APR					H W LOUD MACHINE WORKS, INC. 887 EAST SECOND ST. POMONA, CALIFORNIA	PAGE 85
APR						

CYLINDER REACTIONS

EXTENDED MATRIX

CONDITION - SPINUP (FWD) F.E. -1.6

12500#

		V_o	D_o	S_o	M_{V_o}	M_{D_o}	M_{S_o}
	Σ	3238	2001				
P_{DB}	6266	508	5758				
$P_{V_{DB}}$	4513	366	4147				
$P_{D_{DB}}$	-4345	-352	-3993				
R_{VE}	-3876	-1802	-2074				
R_{DE}	1176	176	1000				
R_{VF}	-3876	-1802	-2074				
R_{DF}	1176	176	1000				
R_{SEF}							
R_{FJ}	-4814	-2240	-2574				
R_{FH}	2032	943	1089				
R_{EK}	-4814	-2240	-2574				
R_{EH}	2032	943	1089				

			REVISED	DATE	NOSE GEAR XV5A	1511L
CALC						RYAN
CHECK						
APR					H W LOUD MACHINE WORKS, INC	PAGE
APR					8F7 EAST SECOND ST. POMONA, CALIFORNIA	86

CYLINDER REACTIONS

EXTENDED MATRIX

CONDITION - SPRINGBACK F.E. -1.6 (FWD)
9200 #

		V_o	D_o	S_o	M_{V_o}	M_{D_o}	M_{S_o}
	Σ	6205	-4441				
P_{DB}	-11806	973	-12779				
P_{VDB}	-8504	701	-9205				
P_{DDB}	8187	-675	8862				
R_{VE}	1150	-3453	4603				
R_{DE}	-1881	338	-2219				
R_{VF}	1150	-3453	4603				
R_{DF}	-1881	338	-2219				
R_{SEF}							
R_{FJ}	1420	-4292	5712				
R_{FH}	-608	1808	-2416				
R_{EK}	1420	-4292	5712				
R_{EH}	-608	1808	-2416				

CALC	[signature]		REVISED	DATE	NOSE GEAR XV5A	1511L
CHECK						RYAN
APR					H W LOUD MACHINE WORKS, INC 887 EAST SECOND ST., POMONA CALIFORNIA	PAGE 87
APR						

CYLINDER REACTIONS

CONDITION - SPRINGBACK (FWD) F.E. -1.6 (9200 #)

SUMMARY

	DUE TO DOOR LOADS	EXTENDED MATRIX	Σ
P_{DB}	292	-11806	
P_{VBD}	210	-8504	
P_{DBD}	-203	8187	
R_{VE}	-105	1150	
R_{DE}	102	-1881	
R_{VF}	-105	1150	
R_{DF}	102	-1881	
R_{SEF}	0	0	
R_{FJ}	-124	1420	
R_{FH}	51	-608	
R_{EK}	-124	1420	
R_{EH}	51	-608	

SINCE DOOR LOADS REDUCE Σ WE WILL USE EXTENDED MATRIX LOADS.

			REVISED	DATE	NOSE GEAR XV5A	1511L
CALC						
CHECK						RYAN
APR						
APR					H. W. LOUD MACHINE WORKS, INC. 837 EAST SECOND ST., POMONA, CALIFORNIA	PAGE 88

CYLINDER REACTIONS

CONDITION - SPRINGBACK F.E. -1.6 (FWD)
9200#

SUMMARY

	DUE TO DOOR LOADS	EXTENDED MATRIX	Σ
P_{DB}	297	-11806	
P_{VBD}	210	-8504	
P_{DBD}	-203	8187	
R_{VE}	-105	1150	
R_{DE}	102	-1881	
R_{VF}	-105	1150	
R_{DF}	102	-1881	
R_{SEF}	0	0	
R_{FJ}	-131	1420	
R_{FH}	55	-608	
R_{EK}	-131	1420	
R_{EH}	55	-608	

SINCE DOOR LOADS REDUCE Σ WE WILL USE EXTENDED MATRIX LOADS

			REVISED	DATE
CALC	[signature]			
CHECK				
APR				
APR				

NOSE GEAR XV5A

H. W. LOUD MACHINE WORKS, INC.
637 EAST SECOND ST., POMONA, CALIFORNIA

1511L

RYAN

PAGE 00

CYLINDER REACTIONS

EXTENDED MATRIX

CONDITION - SPRINGBACK (AFT) F.E.-1.6 EMERGENCY
9200 #

		V_o	D_o	S_o	M_{V_o}	M_{D_o}	M_{S_o}
	Σ	3199	-2242				
P_{DB}	-5949	502	-6451				
P_{VDB}	-4286	361	-4647				
P_{DDB}	4126	-348	4474				
R_{VE}	544	-1780	2324				
R_{DE}	-946	174	-1120				
R_{VF}	544	-1780	2324				
R_{DF}	-946	174	-1120				
R_{SEF}							
R_{FJ}	671	-2213	2884				
R_{FH}	-288	932	-1220				
R_{EK}	671	-2213	2884				
R_{EH}	-288	932	-1220				

CALC	[signature]		REVISED	DATE	NOSE GEAR XV5A	1511L
CHECK						RYAN
APR					H W LOUD MACHINE WORKS, INC 887 EAST SECOND ST POMONA CALIFORNIA	PAGE 90
APR						

CYLINDER REACTIONS

EXTENDED MATRIX

CONDITION - SPRINGBACK (FWD) F.E. -1.6

12500#

		V_o	D_o	S_o	M_{V_o}	H_{D_o}	M_{S_o}
	Σ	3192	-2438				
P_{DB}	-6514	501	-7015				
P_{VDB}	-4693	360	-5053				
P_{DDB}	4518	-347	4865				
R_{VE}	.751	-1776	2527				
R_{DE}	-1044	174	-1218				
R_{VF}	751	-1776	2527				
R_{DF}	-1044	174	-1218				
R_{SEF}		-					
R_{FJ}	928	-2208	3136				
R_{FH}	-396	930	-1326				
R_{EK}	928	-2208	3136				
R_{EH}	-396	930	-1326				

			REVISED	DATE
CALC				
CHECK				
APR				
APR				

NOSE GEAR XV5A

1511L

RYAN

H. W. LOUD MACHINE WORKS, INC.
187 EAST SECOND ST., POMONA, CALIFORNIA

PAGE 91

CYLINDER REACTIONS

EXTENDED MATRIX

CONDITION - MAX. VERTICAL (FWD) F.E.-1.6
9200#

		V_o	D_o	S_o	M_{V_o}	M_{D_o}	M_{S_o}
	Σ	6342	1009				
P_{DB}	3897	994	2903				
P_{VDB}	2807	716	2091				
P_{DDB}	-2703	-690	-2013				
R_{VE}	-4575	-3529	-1046				
R_{DE}	849	345	504				
R_{VF}	-4575	-3529	-1046				
R_{DF}	849	345	504				
R_{SEF}							
R_{FJ}	-5685	-4387	-1298				
R_{FH}	2396	1847	549				
R_{EK}	-5685	-4387	-1298				
R_{EH}	2396	1847	549				

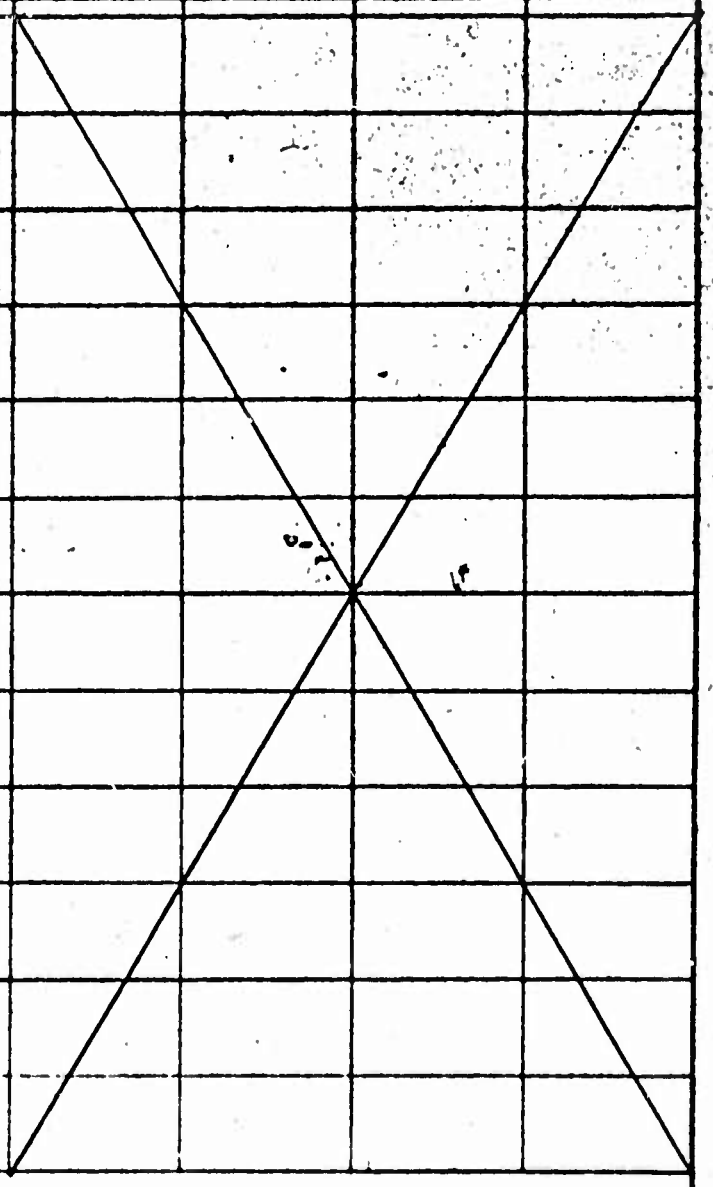

			REVISED	DATE
CALC	[illegible]			
CHECK				
APR				
APR				

NOSE GEAR XVSA

H W LOUD MACHINE WORKS, INC
887 EAST SECOND ST., POMONA, CALIFORNIA

1511L
RYAN
PAGE 92

CYLINDER REACTIONS

EXTENDED MATRIX

CONDITION - MAX. VERTICAL (FWD) F.E.-1.6
12500#

		V_o	D_o	S_o	M_{V_o}	H_{D_o}	M_{S_o}
	Σ	3263	519				
P_{DB}	2005	512	1493				
$P_{VDB.}$	1444	368	1076				
P_{DDB}	-1391	-355	-1036				
R_{VE}	-2354	-1816	-538				
R_{DE}	437	178	259				
R_{VF}	-2354	-1816	-538				
R_{DF}	437	178	259				
R_{SEF}							
R_{FJ}	-2925	-2257	-668				
R_{FH}	1233	951	282				
R_{EK}	-2925	-2257	-668				
R_{EH}	1233	951	282				

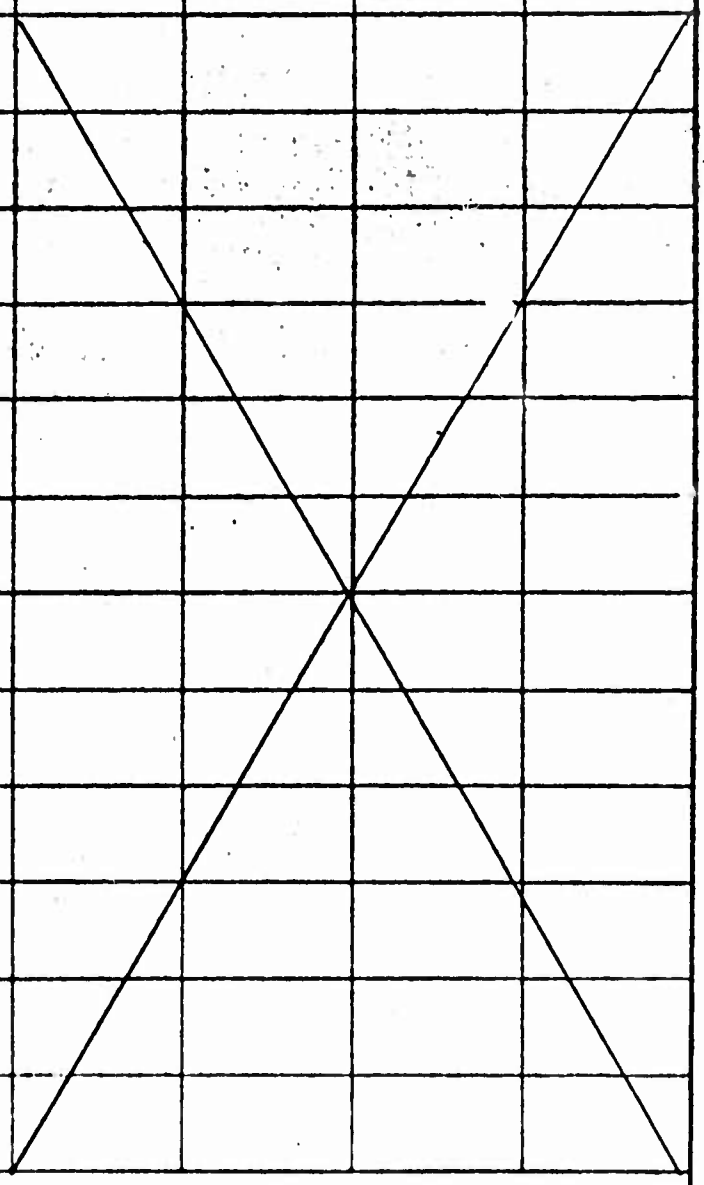

CALC	Lockheed		REVISED	DATE	NOSE GEAR XV5A	1511 L
CHECK						RYAN
APR						
APR					H. W. LOUD MACHINE WORKS, INC. 887 EAST SECOND ST. POMONA CALIFORNIA	PAGE 93

CYLINDER REACTIONS

EXTENDED MATRIX

CONDITION - MAX. (AFT) VERTICAL F.E.-1.6

9200# EMERGENCY

		V_o	D_o	S_o	MV_o	HD_o	MS_o
	Σ	3270	520				
P_{DB}	2009	513	1496				
P_{VDB}	1447	369	1078				
P_{ODB}	-1395	-357	-1038				
R_{VE}	-2359	-1820	-539				
R_{DE}	438	178	260				
R_{VF}	-2359	-1820	-539				
R_{DF}	438	178	260				
R_{SEF}							
R_{FJ}	-2931	-2262	-669				
R_{FH}	1236	953	283				
R_{EK}	-2931	-2262	-669				
R_{EH}	1236	953	283				

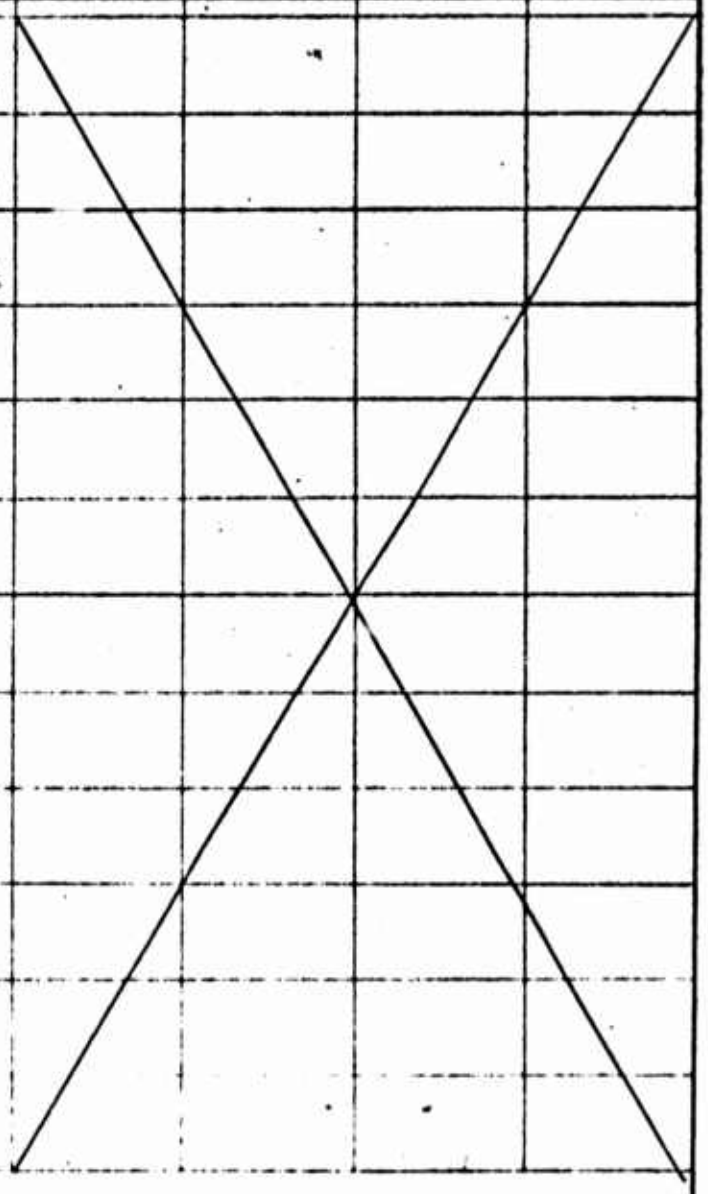

CALC			REVISED	DATE	NOSE GEAR XV5A	1511
CHECK						RYAN
APP						
APP					H W LOUD MACHINE WORKS INC 887 EAST SECOND ST POMONA CALIFORNIA	PAGE 94

CYLINDER REACTIONS

EXTENDED MATRIX

CONDITION - VTOL (AFT) MAX. VERTICAL F.E. -1.6
9200#
EMERGENCY

		V_o	D_o	S_o	M_{V_o}	M_{D_o}	M_{S_o}
	Σ	8448	-739				
P_{DB}	-801	1325	-2126				
P_{VDB}	-578	954	-1532				
P_{DDB}	556	-919	1475				
R_{VE}	-3935	-4701	766				
R_{DE}	91	460	-369				
R_{VF}	-3935	-4701	766				
R_{DF}	91	460	-369				
R_{SEF}							
R_{FJ}	-4892	-5843	951				
R_{FH}	2059	2461	-402				
R_{EK}	-4892	-5843	951				
R_{EH}	2059	2461	-402				

			REVISED	DATE
CALC				
CHECK				
APR				
APR				

NOSE GEAR XV5A

1511L

RYAN

H. W. LOUD MACHINE WORKS, INC.
637 EAST SECOND ST., POMONA, CALIFORNIA

PAGE 57

CYLINDER REACTIONS

EXTENDED MATRIX

CONDITION - UNSYMM. BRAKING (AFT) F.E.-5.3
9200#

		V_o	D_o	S_o	M_{V_o}	H_{D_o}	M_{S_o}
	Σ	4171	-365	637		5032	2884
P_{DB}	-517	654	-945				-226
P_{VDB}	-372	471	-680				-163
P_{DDB}	358	-454	655				157
R_{VE}	-314	-2321	340	1280		306	81
R_{DE}	-75	227	-146	-78			-78
R_{VF}	-3486	-2321	340	-1280		-306	81
R_{DF}	81	227	-146	78			-78
R_{SEF}	-637			-637			
R_{FJ}	-4121	-2885	422	-1379		-380	101
R_{FH}	1074	1215	-179	-79		160	-43
R_{EK}	-390	-2885	422	1592		380	101
R_{EH}	164	1215	-179	-669		-160	-43

CALC			REVISED	DATE	NOSE GEAR XV5A	1511L
CHECK						RYAN
APR						
APR					H W LOUD MACHINE WORKS INC 887 EAST SECOND ST POMONA CALIFORNIA	PAGE 96

CYLINDER REACTIONS

EXTENDED MATRIX

CONDITION - UNSYMM. BRAKING (FWD) F.E. - 5.3
12500#

		V_o	D_o	S_o	Mv_o	H_{D_o}	M_{S_o}
	Σ	4876	-427	1105	0	8730	3373
P_{DB}	-605	764	-1105				-264
P_{VDB}	-435	551	-796				-190
P_{DDB}	418	-531	766				183
R_{VE}	581	-2713	398	2220		531	95
R_{DE}	-131	265	-170	-134			-92
R_{VF}	-4971	-2713	398	-2220		-531	95
R_{DF}	137	265	-170	134			-92
R_{SEF}	-1105			-1105			
R_{FJ}	-5814	-3373	494	-2393		-660	118
R_{FH}	1301	1420	-209	-138		278	-50
R_{EK}	660	-3373	494	2761		660	118
R_{EH}	278	1420	-209	-1161		-278	-50

			REVISED	DATE
CALC				
CHECK				
APR				
APR				

NOSE GEAR XYSA

H W LOUD MACHINE WORKS, INC
387 EAST SECOND ST., POMONA, CALIFORNIA

1511L

RYAN

CYLINDER REACTIONS

EXTENDED MATRIX

CONDITION - 3PT BRAKED ROLL F.E. -5.3
12500 #

		V_o	D_o	S_o	M_{V_o}	M_{D_o}	M_{S_o}
	Σ	3193	-279				2204
P_{DB}	-394	501	-722				-173
P_{VDB}	-284	360	-520				-124
P_{DDB}	274	-347	501				120
R_{VE}	-1455	-1777	260				62
R_{DE}	3	174	-111				-60
R_{VF}	-1455	-1777	260				62
R_{DF}	3	174	-111				-60
R_{SEF}							
R_{FJ}	-1809	-2209	323				77
R_{FH}	761	930	-136				-33
R_{EK}	-1809	-2209	323				77
R_{EH}	761	930	-136				-33

			REVISED	DATE
CALC	Fairchild			
CHECK				
APR				
APR				

NOSE GEAR XV5A

1511 L

RYAN

H. W. LOUD MACHINE WORKS, INC.
887 EAST SECOND ST., POMONA, CALIFORNIA

CYLINDER REACTIONS

EXTENDED MATRIX

CONDITION - 3PT BRAKED ROLL (AFT) F.S. - 5.3
9200#

		V_o	D_o	S_o	Mv_o	HD_o	MS_o
	Σ	3835	-336				2654
P_{DB}	-477	601	-870				-208
P_{VDB}	-343	433	-626				-150
P_{DDB}	330	-417	603				144
R_{VE}	-1946	-2134	313				75
R_{DE}	3	209	-134				-72
R_{VF}	-1746	-2134	313				75
R_{DF}	3	209	-134				-72
R_{SEF}							
R_{FJ}	-2171	-2653	389				93
R_{FH}	914	1117	-164				-39
R_{EK}	-2171	-2653	389				93
R_{EH}	914	1117	-164				-39

			REVISED	DATE
CALC	Forbish			
CHECK				
APR				
APR				

NOSE GEAR XV5A

1511L

RYAN

H. W. LOUD MACHINE WORKS, INC.
887 EAST SECOND ST., POMONA, CALIFORNIA

CYLINDER REACTIONS

EXTENDED MATRIX

CONDITION - TURNING (FWD) F.E. -5.3
(12500#)

		V_o	D_o	S_o	MV_o	HD_o	MS_o
	Σ	3193	-279	1602	0	12656	0
P_{DB}	-221	501	-722	0			0
P_{VDB}	-160	360	-520				
P_{DDB}	154	-347	501				
R_{VE}	2471	-1777	260	3219		769	
R_{DE}	-132	174	-111	-195	0		0
R_{VF}	-5505	-1777	260	-3219		-769	0
R_{DF}	254	174	-111	195	0		0
R_{SEF}	-1602			-1602			
R_{FJ}	-6312	-2209	323	-3469		-957	0
R_{FH}	996	930	-136	-200		402	0
R_{EK}	3074	-2209	323	4003		957	0
R_{EH}	-1292	930	-136	-1684		-402	0

			REVISED	DATE
CALC	Ritchie			
CHECK				
APR	1			
APR				

NOSE GEAR X-15A

151.1.L

RYAN

H W LOUD MACHINE WORKS, INC
887 EAST SECOND ST., POMONA, CALIFORNIA

CYLINDER REACTIONS

CONDITION - TURNING (FWD) F.E. -5.3 (12500#)

SUMMARY

	DUE TO DOOR LOADS	EXTENDED MATRIX	Σ
P_{DB}	292	-221	
P_{VBD}	210	-160	
P_{DBD}	-203	154	
R_{VE}	-105	2471	
R_{DC}	102	-132	
R_{VF} *	-105	-5505	
R_{DF}	102	258	
R_{SEF}	0	-1602	
R_{FJ}	-124	-6312	
R_{FH}	51	996	
R_{EK}	-124	3074	
R_{EH}	51	-1292	

			REVISED	DATE
CALC				
CHECK				
APR				
APR				

NOSE GEAR XV5A

1511L

RYAN

H. W. LOUD MACHINE WORKS, INC.
607 EAST SECOND ST., POMONA, CALIFORNIA

PAGE 101

CYLINDER REACTIONS

EXTENDED MATRIX

CONDITION - TURNING (AFT) F.E. - 5.3

9200#

		V_o	D_o	S_o	M_{V_o}	M_{D_o}	M_{S_o}
	Σ	3198	-280	1380		10902	2212
P_{DB}	-398	501	-725				-174
P_{VDB}	-286	361	-522				-125
P_{DDB}	274	-348	502				120
R_{VE}	1979	-1780	261	2773		663	62
R_{DE}	-166	174	-112	-168			-60
R_{VF}	-4893	-1780	261	-2773		-663	62
R_{DF}	170	174	-112	168			-60
R_{SEF}	-1380			-1380			
R_{FJ}	-5621	-2212	324	-2986		-824	77
R_{FH}	937	932	-137	-172		347	-33
R_{EK}	2461	-2212	324	3448		824	77
R_{EH}	-1035	932	-137	-1450		-347	-33

CALC	[signature]		REVISED	DATE	NOSE GEAR XY5A	15176
CHECK						RYFN
APR					H. W. LOUD MACHINE WORKS, INC. 807 EAST SECOND ST., POMONA, CALIFORNIA	PAGE 102
APR						

SUMMARY: CYLINDER REACTIONS

CONDITION	P_{BD}	P_{VBD}	P_{DBD}	R_{VE}	R_{DE}	R_{VF}	R_{DF}	R_{SET}	R_{FJ}	R_{FH}	R_{EK}	R_{EH}
SPINUP (FWD) F.E.-1.6 9200#	11273	8120	-7818	-6974	2116	-6974	2116	0	-8662	3655	-8662	3655
SPINUP (AFT) F.E.-1.6 9200#	6059	4365	-4202	-3748	1137	-3748	1137	0	-4655	1965	-4655	1965
SPINUP (FWD) F.E.-1.6 12500#	6266	4513	-4345	-3876	1176	-3876	1176	0	-4814	2032	-4814	2032
SPRINGBACK (FWD) F.E.-1.6 9200#	-11806	-8504	8187	1150	-1881	1150	-1881	0	1420	-608	1420	-608
SPRINGBACK (AFT) F.E.-1.6 EMERG. 9200#	-5949	-4286	4126	544	-946	544	-946	0	671	-288	671	-288
SPRINGBACK (FWD) F.E.-1.6 12500#	-6514	-4693	4518	751	-1044	751	-1044	0	928	-396	928	-396
MAX VERTICAL (FWD) F.E.-1.6 9200#	3897	2807	-2703	-4575	849	-4575	849	0	-5685	2396	-5685	2396
MAX. VERTICAL (FWD) F.E.-1.6 12500#	2005	1444	-1391	-2354	437	-2354	437	0	-2925	1233	-2925	1233
MAX. VERTICAL (AFT) F.E.-1.6 EMER. 9200#	2009	1447	-1395	-2359	438	-2359	438	0	-2931	1236	-2931	1236
VTOL (AFT) MAX. VERT. F.E.-1.6 EMERG. 9200#	-801	-578	556	-3935	91	-3935	91	0	-4892	2059	-4892	2059
UNSYMM. BRAKING (AFT) F.E.-5.3 (9200#)	-517	-372	358	-314	-75	-3486	81	-637	-4121	1074	-390	164
UNSYMM. BRAKING (FWD) F.E.-5.3 12500#	-605	-435	418	531	-131	-4971	137	-1105	-5814	1301	660	278
3PT. BRAKED ROLL F.E.-5.3 12500#	-394	-284	274	-1455	3	-1455	3	0	-1809	761	-1809	761
3PT. BRAKED ROLL (AFT) F.E.-5.3 9200#	-477	-343	330	-1746	3	-1746	3	0	-2171	914	-2171	914
TURNING (FWD) F.E.-5.3 12500#	-221	-160	154	2471	-132	-5505	254	-1602	-6312	996	3074	-1292
TURNING (AFT) F.E.-5.3 9200#	-398	-286	274	1979	-166	-4893	170	-1380	-5621	937	2461	-1085

TABLE VIII

CALC | CHECK | APR | APR | DATE | REVISED

NOSE GEAR XNSA

DEFLECTION ANALYSIS

H. W. LOUD MACHINE WORKS, INC.
887 EAST SECOND ST., POMONA, CALIFORNIA

RYAN

ISSUE

CALC	CHECK	APR	APR
Gottlieb			

REVISED	DATE

NOSE GEAR XVSA

DEFLECTION ANALYSIS

H. W. LOUD MACHINE WORKS, INC.
887 EAST SECOND ST., POMONA, CALIFORNIA

ISIC | RYAN |

SUMMARY: BEARING REACTIONS

CONDITION	RT	R_{DUB}	R_{SUB}	R_{DLB}	R_{SLB}	
SPINUP (FWD) F.E.-1.6 9200#		10427		-14027		
SPINUP (AFT) EMERG. F.E.-1.6 9200#		5605		-7540		
SPINUP (FWD) F.E.-1.6 12500#		5795		-7706		
SPRINGBACK (FWD) F.E.-1.6 9200#		-9436		13876		
SPRINGBACK (AFT) F.E.-1.6 EMERG. 9200#		-4746		6988		
SPRINGBACK (FWD) F.E.-1.6 12500#		-5234		7672		
MAX. VOLT. (FWD) F.E.-1.6 9200#		4128		-5187		
MAX. VOLT. (FWD) F.E.-1.6 12500#		2123		-2642		
MAX. VOLT. (AFT) F.E.-1.6 EMERG. 9200#		2128		-2648		
VTOL (AFT) MAX. VOLT. F.E.-1.6 EMERG. 9200#		329		410		
UNSYMM. BRAKING (AFT) F.E.-5.3 9200#	-149	228	1259	137	-1746	
UNSYMM. BRAKING (FWD) F.E.-5.3 12500#	-259	266	2184	161	-3030	
3PT. BRAKED ROLL F.E.-5.3 12500#		175		104		
3PT. BRAKED ROLL (AFT) F.E.-5.3 9200#		209		127		
TURNING (FWD) F.E.-5.3 12500#	-375	175	3166	104	-4392	
TURNING (AFT) F.E.-5.3 9200#	-323	174	2727	106	-3783	

TABLE IX

TABLE X - MATRIX

CYLINDER BENDING MOMENT

CALC	[illegible]		REVISED	DATE	NOSE GEAR XV5A	1511L
CHECK					DEFLECTION ANALYSIS	RYAN
APR						
APR					H. W. LOUD MACHINE WORKS, INC. 887 EAST SECOND ST., POMONA, CALIFORNIA	PAGE 105

CALC DS Zukin
CHECK
APR
APR
REVISED
DATE

CYLINDER BENDING MOMENT

DETAILED MATRIX

CONDITION - F.E. - 1.6

		R_{DLB}	R_{SLB}	P_{DB}	R_{DUB}	R_{SJB}	R_{FJ}	R_{EK}	R_{VE}	R_{VF}	R_T	P_{DOOR}
	Σ											
~~M_{DN-}~~												
M_{SN-}		-1.590										
M_{DN+}			1.590									
M_{SN+}		-1.590										
~~M_{DC-}~~												
M_{SC-}		-2.56										
M_{DC+}			2.56								3.294	
M_{SC+}		-2.56		2.520								
M_{DM}			4.290								-8.899	
M_{SM}		-4.290		3.721								
M_{DL-}			4.343								8.952	
M_{SL-}		-4.343		3.757								
M_{DL+}			4.343					2.220	-2.220		8.952	
M_{SL+}		-4.343		3.757								
M_{DUB}			7.818					3.634	-3.634		12.427	
M_{SUB}		-7.818		6.169								-3.475
M_{DEF}			17.348			9.525	7.507	-7.507			21.949	
M_{SEF}		-17.343		12.778	-9.525							-13.00
			17.343			9.525			-8.22	8.22	21.949	

NOSE GEAR XVSA

H. W. LOUD MACHINE WORKS, INC.
887 EAST SECOND ST., POMONA, CALIFORNIA

PAGE 106 | RYAN | ISIII

CALC | CHECK | APR | APR

REVISED | DATE

CYLINDER BENDING MOMENT

DETAILED MATRIX

CONDITION - F.E. - 5.3

		R_{DLB}	R_{SLB}	P_{DB}	R_{DUB}	R_{SUB}	R_{FJ}	R_{EK}	R_{VE}	R_{VF}	R_T	P_{DOOR}
	Σ											
~~M_{DN-}~~												
M_{SN-}		-1.590										
M_{DN+}			1.590									
M_{SN+}		-1.590										
~~M_{DC-}~~												
M_{SC-}		-2.56										
M_{DC+}			2.56								2.458	
M_{SC+}		-2.56		2.520								
M_{DM}			4.290								7.989	
M_{SM}		-4.290		3.721								
M_{DL-}			4.343								8.042	
M_{SL-}		-4.343		3.757								
M_{DL+}			4.343					2.220	-2.220		8.042	
M_{SL+}		-4.343		3.757								
M_{DUB}			11.518					5.138	-5.138		15.217	
M_{SUB}		-11.518		8.736								-7.175
M_{DEF}			17.343				5.825	7.507	-7.507		21.039	
M_{SEF}		-17.343		12.778	-5.825							-13.00
M_{DM}			17.343				5.825			-8.22	8.22	21.039	

NOSE GEAR XVSA

H. W. LOUD MACHINE WORKS, INC.
887 EAST SECOND ST., POMONA, CALIFORNIA

PAGE 107 | RYAN | 15116

CALC | CHECK | APR | APR

REVISED | DATE

CYLINDER BENDING MOMENT

EXTENDED MATRIX

CONDITION - SPINUP F.E. = 1.6 (FWD) (9200#)

		R_{DLB}	RS_{LB}	P_{DB}	R_{DUB}	RS_{UB}	R_{FJ}	R_{EK}	R_{VE}	R_{VF}	R_T	P_{DOOR}
	Σ	14027	0	11565	-10427	0	-8793	-8793	-7079	-7079	0	300
~~P_{DOOR}~~												
M_{SN-}	-22303	-22303										
M_{DN+}												
M_{SN+}	-23303	-22303										
~~P_{DOOR}~~												
M_{SC-}	-35909	-35909										
M_{DC+}												
M_{SC+}	-6765	-35909		29144								
M_{DM}												
M_{SM}	-17143	-60176		43033								
M_{DL-}												
M_{SL-}	-17469	-60919		43450								
M_{DL+}	0						-19520	19520				
M_{SL+}	-17469	-60919		43450								
M_{DUB}	0						-31954	31954				
M_{SUB}	-39362	-109663		71344								-1043
M_{DEF}	0						-66009	66009				
M_{SEF}	~0~	-243270		147778	99317							-3900

NOSE GEAR XVSA

H. W. LOUD MACHINE WORKS, INC.
887 EAST SECOND ST., POMONA, CALIFORNIA

PAGE 103 | RYAN | 1511C

CALC | CHECK | APR | APR

REVISED | DATE

NOSE GEAR XVSA

H. W. LOUD MACHINE WORKS, INC.
637 EAST SECOND ST., POMONA, CALIFORNIA

15111 | RYAN

PAGE 109

CYLINDER BENDING MOMENT

EXTENDED MATRIX

CONDITION - SPRINGBACK (END) F.E.-1.6 9200#

		R_{DLB}	R_{SLB}	P_{DB}	R_{DUB}	R_{SUB}	R_{FJ}	R_{EK}	R_{VE}	R_{VF}	R_T	P_{DOOR}
	Σ	-13876	0	-11806	9435	0	1420	1420	1150	1150	0	300
M_{DN-}												
M_{SN-}	22063	22063										
M_{DN+}												
M_{SN+}	22063	22063										
M_{DC-}												
M_{SC-}	35523	35523										
M_{DC+}												
M_{SC+}	5772	35523		-29751								
M_{DM}												
M_{SM}	15548	59528		-43930								
M_{DL-}												
M_{SL-}	15908	60263		-44355								
M_{DL+}	0						3152	-3152				
M_{SL+}	15908	60263		-44355								
M_{DUB}	0						5160	-5160				
M_{SUB}	35652	108483		-72831								-1
M_{DEF}	0						10660	-10660				
M_{SEF}	~0~	240651		-150857	-89868							
M_{DEF+}	0								-9453	9453		

CALC | CHECK | APR | APR

REVISED | DATE

H W LOUD MACHINE WORKS, INC.
887 EAST SECOND ST., POMONA, CALIFORNIA

NOSE GEAR XVSA

PAGE 110 | RYAN | ISIIC

CYLINDER BENDING MOMENT

EXTENDED MATRIX

CONDITION - TURNING (FWD) F.E. -5.3 (12500#)

		R_{DLB}	R_{SLB}	P_{DB}	R_{DUB}	R_{SUB}	R_{FJ}	R_{EK}	R_{VE}	R_{VF}	R_T	P_{DOOR}
	Σ	-104	4392	-221	-175	-3166	-6312	3074	2471	-5505	375	
~~P_{DC}~~												
M_{SN-}	165	165										
M_{DN+}	6983		6983									
M_{SN+}	165	165										
~~P_{DC}~~												
M_{SC-}	266	266										
M_{DC+}	12353		11244								1109	
M_{SC+}	-291	266		-557								
M_{DM}	21838		18842								2996	
M_{SM}	-376	446		-822								
M_{DL-}	22090		19074								3016	
M_{SL-}	-378	452		-830								
M_{DL+}	1253		19074					-14013	-6824		3016	
M_{SL+}	-378	452		-830								
M_{DUB}	8068		50587					-32431	-15794		5706	
M_{SUB}	-733	1198		-1931								
M_{DEF}	-4843		76170			-18442	-47384	-23077			7890	
M_{SEF}	0	1804		-2824	1019							
M_{DEF+}	~0~		76170			-18442			-20312	-46251	7890	

CLEARPRINT CHARTS

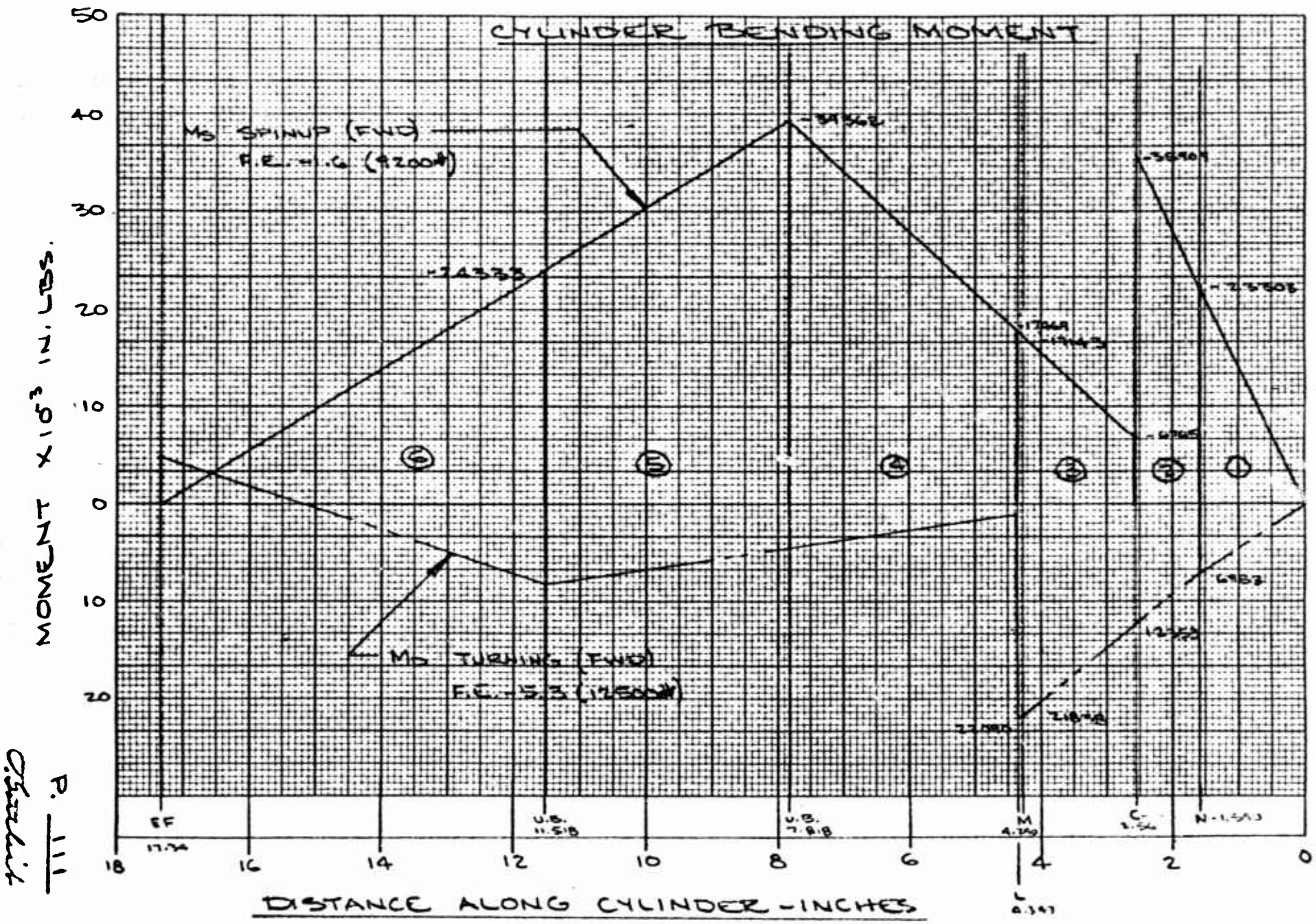

P. 111

CYLINDER

INERTIA CALCULATIONS

TAKEN 1.060 IN. FROM L.B.

O.D. = 3.520	9.731	7.5360
I.D. = 3.245	8.270	5.4428
2t = .275	A = 1.461 IN.^{2}	I = 2.0932 IN.^{4}
t = .1375		

TAKEN 2.119 IN. FROM L.B.

O.D. = 3.520	9.731	7.5360
I.D. = 3.002	7.078	3.9920
2t = .518	A = 2.655	I = 3.5440 IN.^{4}
t = .259		

TAKEN 3.551 IN. FROM L.B.

O.D. = 3.310	8.605	5.8920
I.D. = 3.002	7.078	3.9920
2t = .308	A = 1.527 IN.^{2}	I = 1.9000 IN.^{4}
t = .154		

TAKEN 6.269 IN. FROM L.B.

I = 1.9000 IN.^{4}

TAKEN 9.520 IN. FROM L.B.

I = 1.9000 IN.^{4}

TAKEN 13.459 IN. FROM L.B.

I = 1.9000 IN.^{4}

CALC	[signature]		REVISED	DATE	NOSE GEAR XV5A	1511L
CHECK					DEFLECTION ANALYSIS	RYAN
APR					H. W. LOUD MACHINE WORKS, INC. 887 EAST SECOND ST., POMONA, CALIFORNIA	PAGE 112
APR						

CYLINDER

SPINUP (FWD)

1	2	3	4	5	6	7
PANEL	Z POINT L.B. TO L.H. EDGE	M (ULT) $\times 10^{-3}$	I	EI $\times 10^{6}$	$\frac{M}{EI}$	L PANEL LENGTH
				(4) $\times 10.3$	(3)/(5)	
1	0	0	2.0932	21.560	0	1.590
		23.303			1.081	
2	1.590	23.303	3.5440	36.503	.638	1.970
		35.909			.984	
3	2.56	6.765	1.9200	19.570	.346	1.730
		17.469			.893	
4	4.290	17.469	1.9000	19.570	.893	3.528
		39.362			2.011	
5	7.818	39.362	1.9000	[illegible]	2.011	3.700
		24.333			1.247	
6	11.518	24.333	1.9000	19.570	1.243	5.822
		[illegible]0			0	

OP (FWD) F.E. – 1.6 9200#

7	8	9	10	11	12	13	14	15
L PANEL LENGTH	A $\times 10^3$ PANEL AREA	$\bar{z}$ CENTROID FROM R.H EDGE	$z + \bar{z}$	$A(z+\bar{z})$ $\times 10^3$	$\Sigma [A(z+\bar{z})]$	Σ A (SLOPE)	$z \Sigma A$	Δ WITH RESPECT TO PT. L.E.
	$\frac{(⑥_1 + ⑥_2)⑦}{2}$		② + ⑨	⑧ × ⑩	SUM FROM BOTTOM ⑪	SUM FROM BOTTOM ⑧	② × ⑬	⑫ - ⑭
1.590	.859	1.060	1.060	.911	.1445	.0175	0	.1445
.970	.787	.5294	2.119	1.668	.1436	.0167	.0266	.1170
1.730	1.072	.991	3.551	3.807	.1419	.0158	.0404	.1015
3.528	5.123	1.979	6.269	32.116	.1380	.0148	.0635	.0745
3.700	6.020	1.702	9.520	57.310	.1060	.0096	.0751	.0309
5.822	3.619	1.941	13.459	48.708	.0487	.0036	.0415	.0072

B

SPINUP (FWD) F.E. -1.6 (9200#)

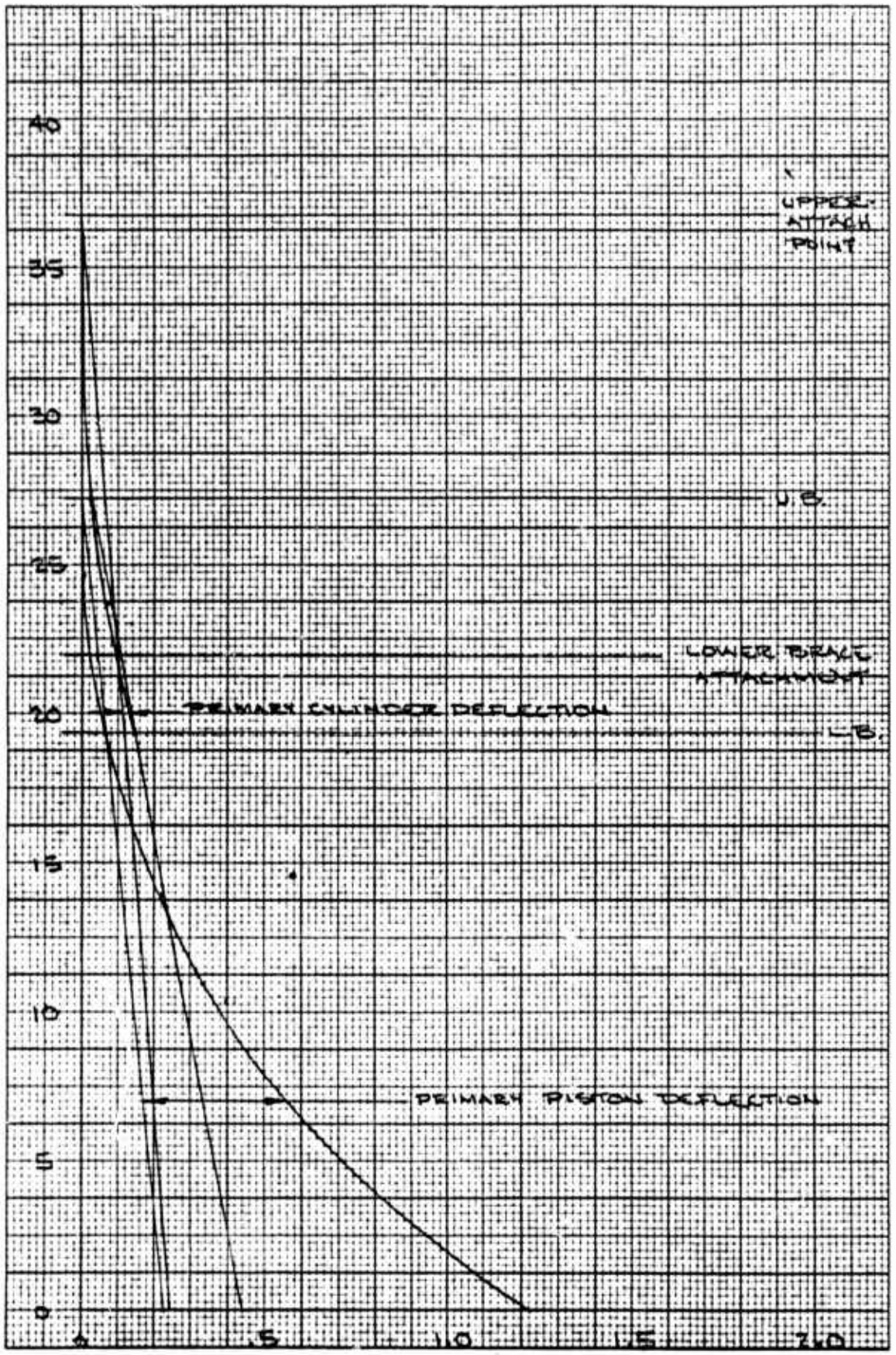

O. Smith

SPINUP (FWD) F.E. -1.6 (9200#)

FIG. III

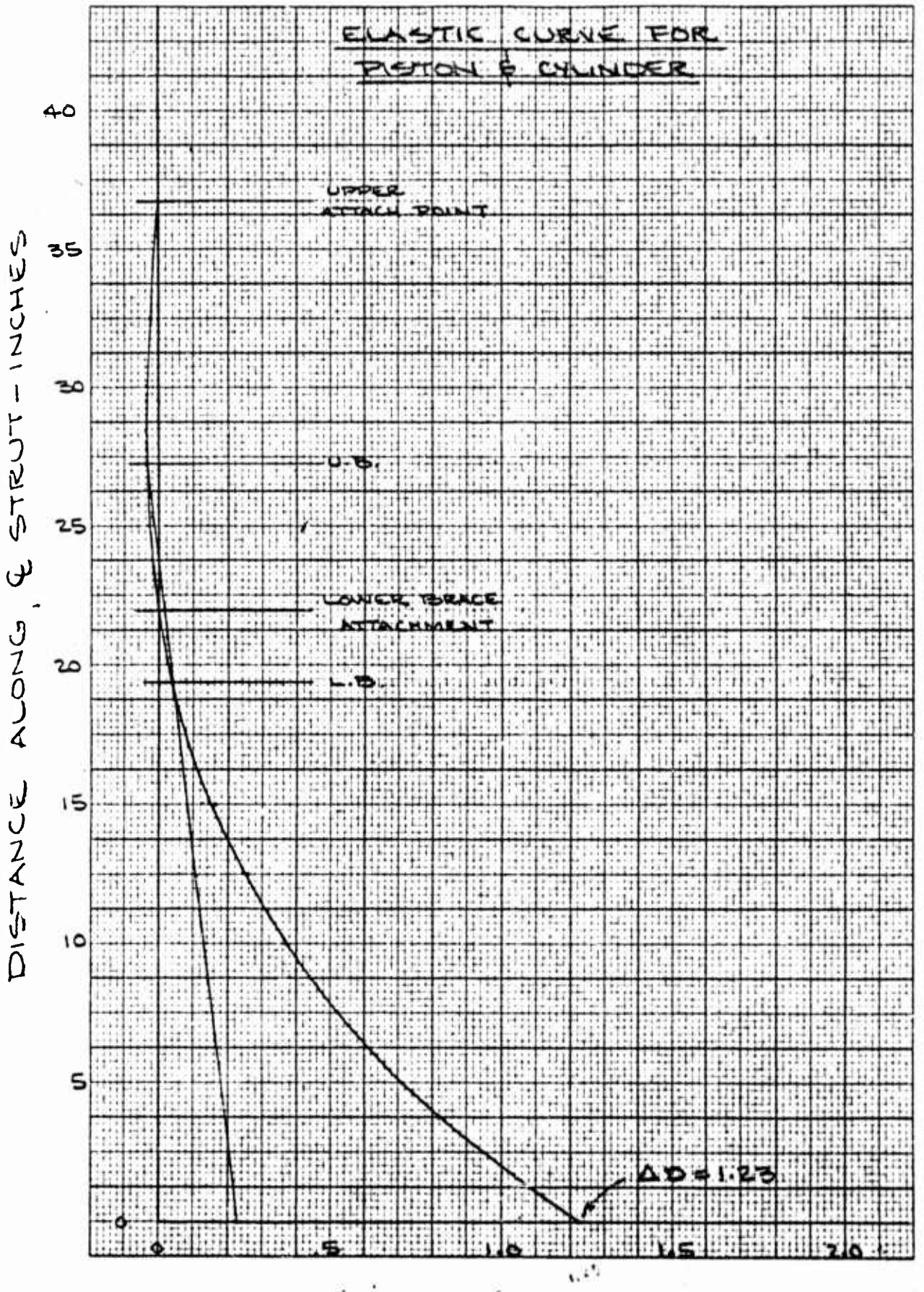

CLEARPRINT PAPER CO. NO. OHIO ... CLEARPRINT CHARTS ... PRINTED IN U.S.A.

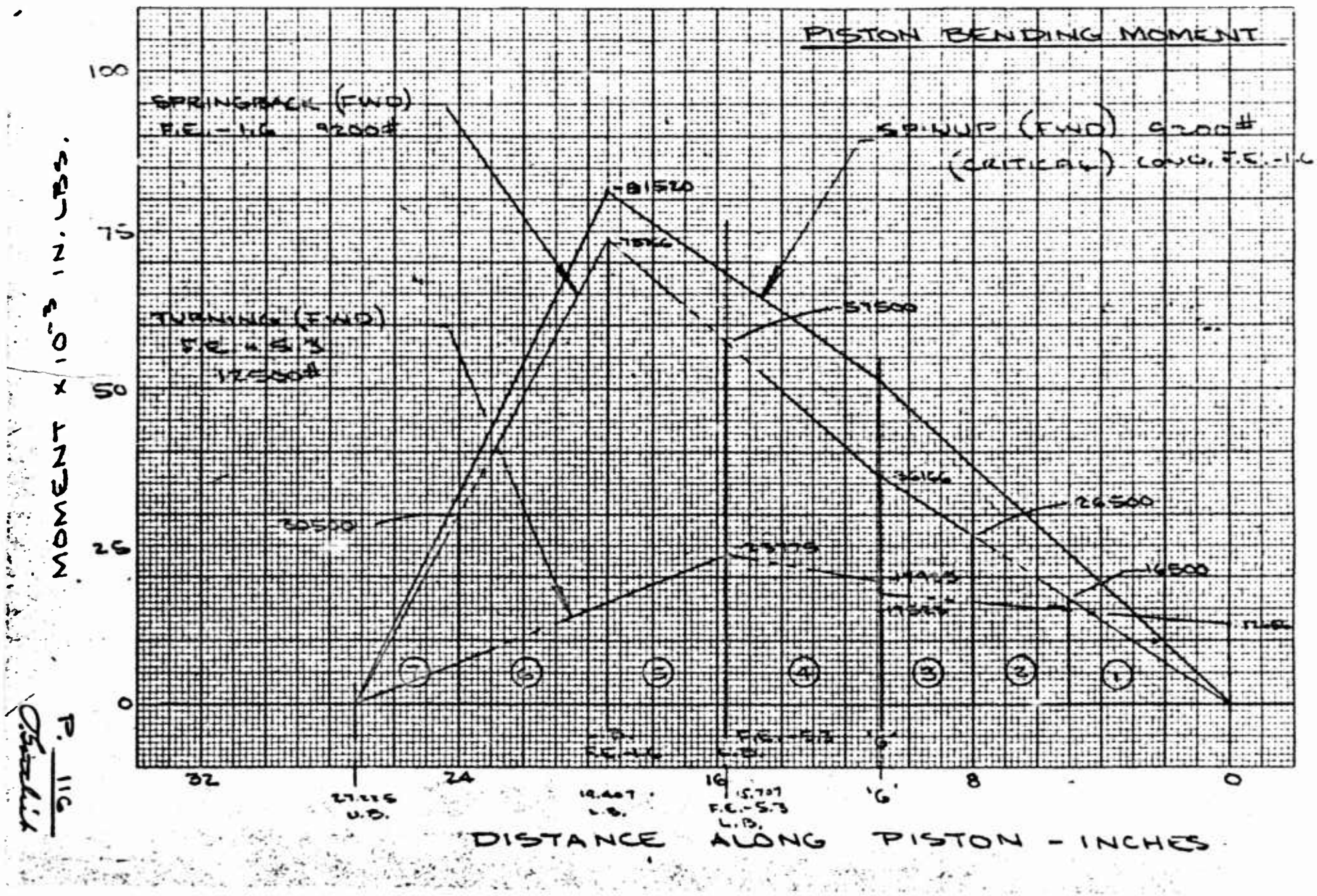

P. 116

INNER CYLINDER

INERTIA CALCULATIONS

TAKEN 3.333 IN. FROM ℄ AXLE

$I = 2 \times .03025 = .0605$ IN.^{4}

TAKEN 6.615 IN. FROM ℄ AXLE

$I = 2 \times .0595 = .1190$ IN.^{4}

TAKEN 9.547 IN. FROM ℄ AXLE

$I = .9445$ IN.^{4}

TAKEN 13.504 IN. FROM ℄ AXLE

$I = .5401$ IN.^{4}

TAKEN 17.635 IN. FROM ℄ AXLE

$I = .6297$ IN.^{4}

TAKEN 21.377 IN. FROM ℄ AXLE

$I = .6297$ IN.^{4}

TAKEN 25.750 IN. FROM ℄ AXLE

$$\Delta t = \frac{\frac{2.491-2.375}{2}}{26.25-23.44} \times (25.750-23.44) = .0485$$

$\therefore$ O.D. $= 2.491 - 2(.0485) = 2.394$

O.D. = 2.394

I.D. = 2.251

$2t = .143$

$t = .0715$

4.501

3.980

$A = .521$ IN.^{2}

1.6123

1.2603

$I = .3520$ IN.^{4}

CALC			REVISED	DATE	NOSE GEAR XV5A	1511L
CHECK					DEFLECTION ANALYSIS	RYAN
APR					H. W. LOUD MACHINE WORKS, INC. 887 EAST SECOND ST., POMONA, CALIFORNIA	PAGE 117
APR						

INNER CYLINDER SPRINGBACK (F

1	2	3	4	5	6	7	8
PANEL	Z POINT 0 TO L.H. EDGE	M (ULT) $\times 10^{-3}$	I	EI $\times 10^{6}$	$\frac{M}{EI}$	L PANEL LENGTH	A $\times 10$ PAN ARE
				(4) x 29	(3)/(5)		$\frac{(6_1+(6}{2}$
1	0	0 / 16.500	.0605	1.755	0 / 9.402	5.000	23.
2	5.000	16.500 / 26.500	.1190	3.451	4.781 / 7.679	3.000	18.
3	8.000	26.500 / 36.166	.9445	27.391	.967 / 1.320	2.938	3.
4	10.[illegible]	36.[illegible] / 5[illegible]	.[illegible]40	15.663	[illegible] / [illegible]	4.769	14.
5	15.[illegible]	[illegible] / [illegible]	.6297	[illegible]	[illegible] / 4.040	3.700	12.
6	19.40	[illegible] / [illegible]	.6297	18.261	4.0[illegible] / [illegible]	4.[illegible]93	13.
7	[illegible]	[illegible] / 0	.[illegible]	10.208	2.98[illegible] / 0	[illegible].225	4.

K

LING BACK (FWD) F.E. -1.6 9200#.

7	8	9	10	11	12	13	14	16
L PANEL LENGTH	A $\times 10^3$ PANEL AREA	$\bar{z}$ CENTROID FROM R.H. EDGE	$z + \bar{z}$	$A(z+\bar{z}) \times 10^3$	$\Sigma [A(z+\bar{z})]$	ΣA (SLOPE)	$\bar{z}\ \Sigma A$	Δ WITH RESPECT TO PT. O
	$\frac{(4_1+6_2)7}{2}$		(2) + (9)	(8) x (10)	SUM (11) FROM BOTTOM	SUM (8) FROM BOTTOM	(2) x (13)	(12) - (14)
5.000	23.505	3.333	3.333	78.342	1.066	.091	0	1.066
3.000	18.690	1.615	6.615	123.634	.987	.068	.340	.647
2.938	3.360	1.547	9.547	32.078	.864	.049	.392	.472
4.769	14.259	2.566	12.504	178.354	.832	.045	.442	.340
3.700	12.302	1.928	11.635	234.581	.639	.031	.487	.152
4.543	13.113	1.970	21.377	80.311	.404	.018	.349	.055
2.225	4.818	1.075	25.[illegible]	124.064	.124	.005	.120	.004

B

P. 118

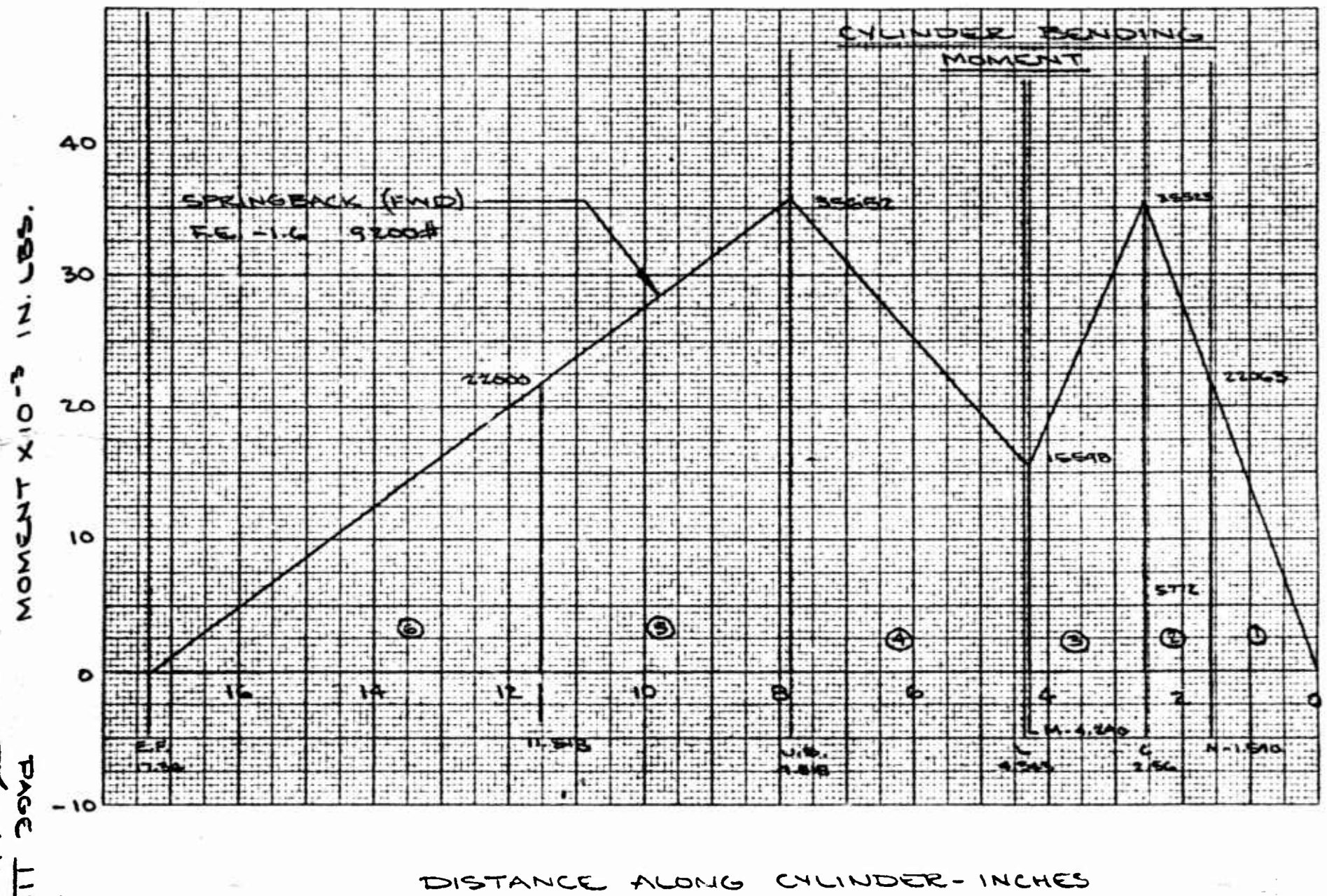
CYLINDER BENDING MOMENT
SPRINGBACK (FWD)
F.E. -1.6 9200#
35652
35523
22000
22063
15598
5772
MOMENT X10^-3 IN. LBS.
40
30
20
10
0
-10
16
14
12
10
8
6
4
2
0
E.F.
11.518
U.B.
4.545
M-4.240
C
2.56
N-1.540
DISTANCE ALONG CYLINDER - INCHES

CYLINDER

SPRINGBACK (FWD) F.E. - 1.6

1	2	3	4	5	6	7	8	9	10
PANEL	$\bar{z}$ POINT Q TO L.H. EDGE	M (ULT)	I	EI $\times 10^6$	$\frac{M}{EI}$	L PANEL LENGTH	A PANEL AREA	$\bar{\bar{z}}$ CENTROID FROM R.H. EDGE	$\bar{z} + \bar{\bar{z}}$
				(4) x 10.3	(3)/(5)		$\frac{(6_1+6_2)(7)}{2}$		(2) +
1	0	0 22.063	2.0932	21.560	0 1.023	1.590	.813	1.060	1.06
2	1.590	22.063 35.523	3.5440	36.503	.604 .973	.970	.765	.523	2.11
3	2.560	35.523 15.598	1.9000	19.570	1.815 .797	1.783	2.329	.782	3.34
4	4.343	15.598 35.652	1.9000	19.570	.797 1.822	3.475	4.552	1.951	6.2
5	7.818	35.652 22.000	1.9000	19.570	1.822 1.124	3.700	5.450	1.706	9.5
6	11.518	22.000 0	1.900	19.570	1.124 0	5.822	3.272	1.941	13.4

A

RINGBACK (FWD) F.E. - 1.6 9200#

6	7	8	9	10	11	12	13	14	15
$\frac{M}{EI}$	L PANEL LENGTH	A PANEL AREA	$\bar{z}$ CENTROID FROM R.H. EDGE	$z + \bar{z}$	$A(z+\bar{z})$	Σ $[A(z+\bar{z})]$	Σ A(SLOPE)	z ΣA	Δ WITH RESPECT TO PT. LB
3/5		$\frac{(6_1+6_2)7}{2}$		2 + 9	8 x 10	SUM 11 FROM BOTTOM	SUM 8 FROM BOTTOM	2 x 13	12 - 14
0 1.023	1.590	.813	1.060	1.060	.862	.135	.0172	0	.135
.604 .973	.970	.765	.523	2.113	1.616	.134	.0164	.026	.108
1.815 .797	1.783	2.329	.782	3.342	7.784	.132	.0156	.040	.092
.797 1.822	3.475	4.552	1.951	6.294	28.650	.125	.0133	.058	.067
1.822 1.124	3.700	5.450	1.706	9.524	51.906	.096	.0087	.068	.028
1.124 0	5.822	3.272	1.941	13.459	44.038	.044	.0033	.038	.006

T. Gottlieb

SPRINGBACK (FWD) F.E. -1.6 9200#

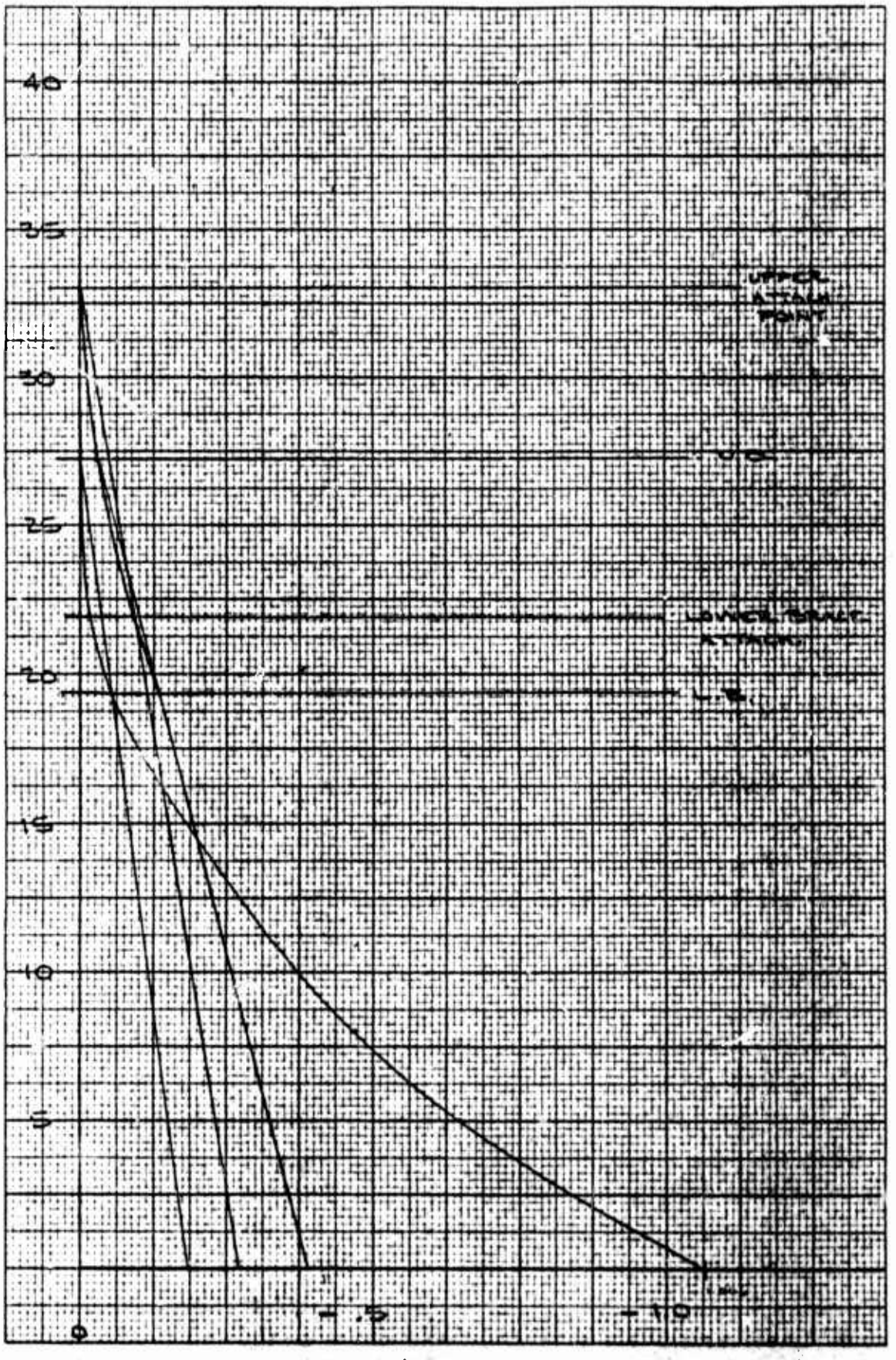

FIG. IV

SPRINGBACK (FWD) F.E.-1.6 9200#

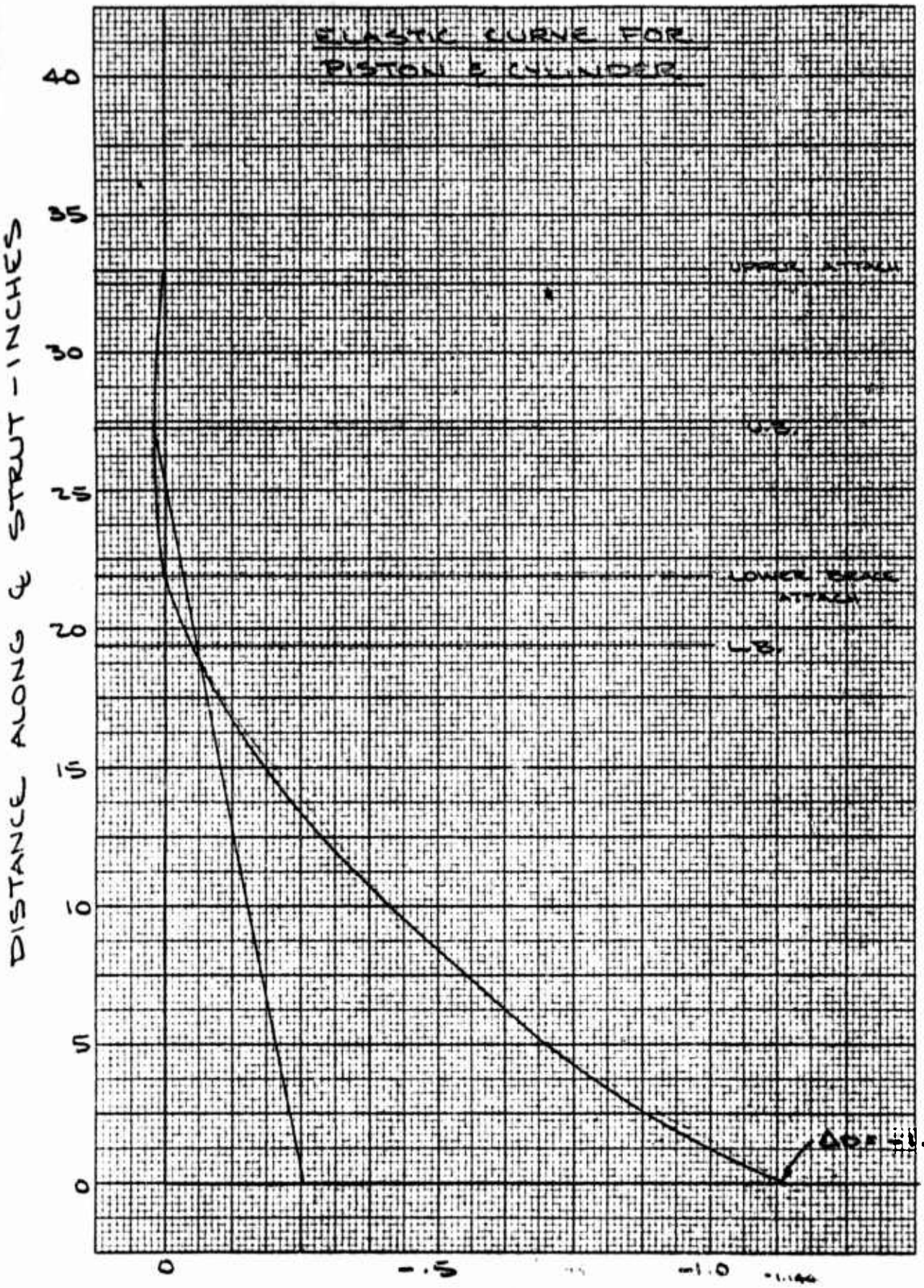

PRINTED IN U.S.A. ON CLEARPRINT

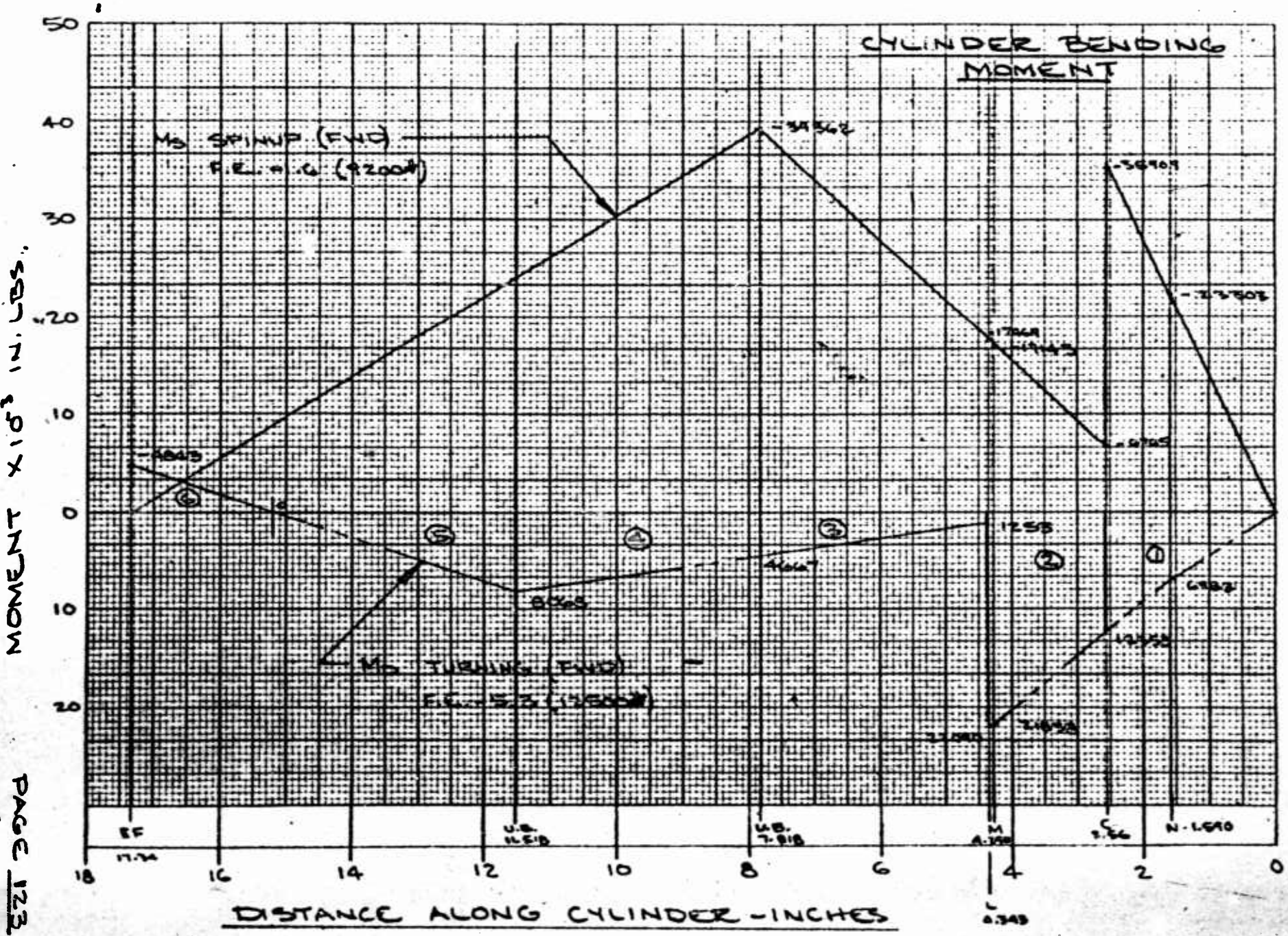

PAGE 123

CYLINDER TURNING (FWD)

12500#

	2	3	4	5	6	7	8
	[illegible] L.B. L.H. [illegible]	M (ULT) $\times 10^{-3}$	I	EI $\times 10^{6}$	$\frac{M}{EI}$	L PANEL LENGTH	A $\times 10$ PAN ARE
				(4) $\times$ 10.3	(3)/(5)		(6)+(6) / 2
1	0	0 / 12.353	2.0932	21.560	0 / .573	2.560	.73
2	2.56	12.353 / 22.090	1.9000	19.570	.631 / 1.129	1.730	1.5
3	4.290	1.253 / 4.667	1.9000	19.570	.064 / .238	3.710	.5
4	8.00	4.667 / 8.068	1.9000	19.570	.238 / .412	3.518	1.1
5	11.518	8.068 / 0	1.9000	19.570	.412 / 0	3.682	.7

A

LAMBERT

G (FWD) F.E. -5.3
12500#

7	8	9	10	11	12	13	14	15
L PANEL LENGTH	$A_{\times 10^3}$ PANEL AREA	$\bar{z}$ CENTROID FROM R.H. EDGE	$z + \bar{z}$	$A(z+\bar{z}) \times 10^3$	$\Sigma [A(z+\bar{z})]$	ΣA (SLOPE)	$\bar{z}\ \Sigma A$	Δ WITH RESPECT TO PT. L.E.
	$\frac{(6_1+6_2)7}{2}$		(2) + (9)	(8) × (10)	SUM (11) FROM BOTTOM	SUM (8) FROM BOTTOM	(2) × (13)	(12) - (14)
2.560	.733	1.707	1.707	1.251	.0312	.0047	0	.0312
1.730	1.522	.948	3.508	5.339	.0300	.0040	.0102	.0198
3.710	.560	2.213	6.503	3.642	.0246	.0025	.0107	.0139
3.518	1.143	1.916	9.916	11.334	.0210	.0019	.0152	.0058
3.682	.758	1.227	12.745	9.661	.0097	.0008	.0092	.0005

B

PRINTED IN U.S.A. ON CLEARPRINT TECHNICAL PAPER NO. 1015

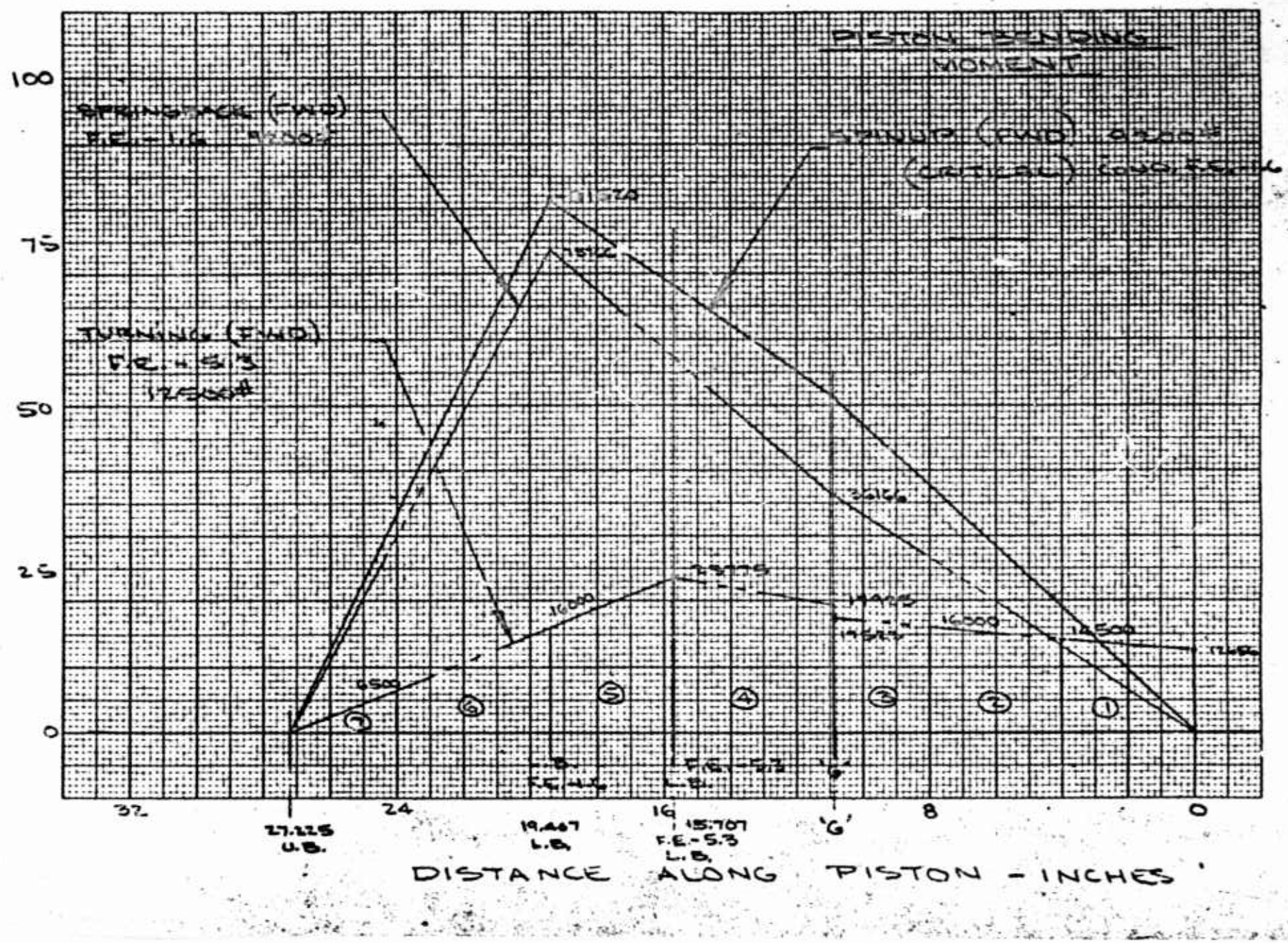

PAGE 125

INNER CYLINDER
INERTIA CALCULATIONS

TAKEN 2.040 FROM ℄ AXLE

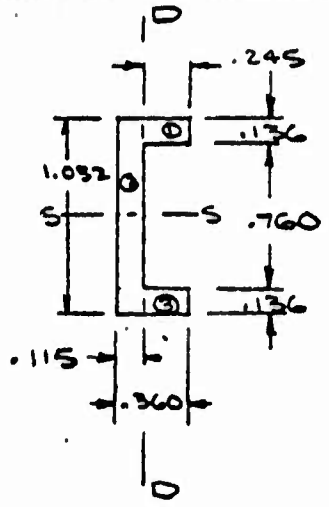

		A	D	S	AS	AD	AS^2	AD^2	$I_{O_{D-D}}$	$I_{O_{S-S}}$
1	.245X.136	.033	.964	.238	.0079	.0318	.0019	.0307	.00017	.00005
2	.115X1.032	.119	.516	.0575	.0068	.0614	.0004	.0317	.00013	.0106
3	.245X.136	.033	.068	.238	.0079	.0022	.0019	.00015	.00017	.00005
	Σ	.185			.0226	.0954	.0042	.06255	.00047	.01070

$$\bar{S} = \frac{\Sigma AS}{\Sigma A} = \frac{.0226}{.185} = .122$$

$$\bar{D} = \frac{\Sigma AD}{\Sigma A} = \frac{.0954}{.185} = .516$$

$$I_{S-S} = .0107 + .06255 - .516(.0954) = .02405 \text{ IN.}^4$$

$$I_{D-D} = .00047 + .0042 - .122(.0226) = .00187 \text{ IN.}^4$$

CALC	Brochi		REVISED	DATE
CHECK				
APR				
APR				

NOSE GEAR XV5A — 1511L
DEFLECTION ANALYSIS — RYAN

INNER CYLINDER

INERTIA CALCULATIONS - CONT'D

TAKEN 6.036 IN. FROM ℄ AXLE

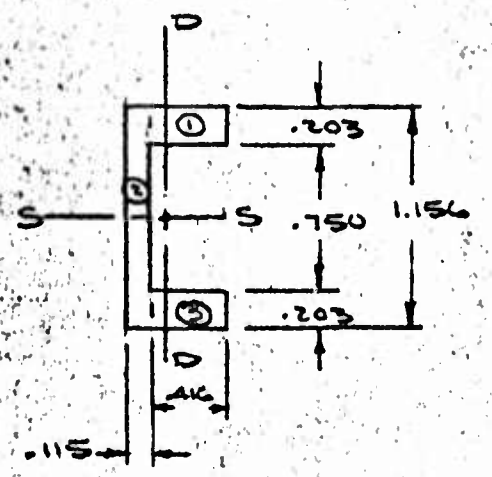

		A	D	S	AS	AD	AS^2	AD^2	$I_{o\,D-D}$	$I_{o\,S-S}$
1	.203X.416	.084	1.054	.323	.0271	.0885	.0087	.0933	.00122	.00029
2	.115X1.156	.133	.578	.058	.0077	.0769	.00045	.0444	.000146	.01483
3	.203X.416	.084	.102	.323	.0271	.0086	.0087	.00087	.00122	.00029
	Σ	.301			.0619	.1740	.0179	.1386	.00259	.01541

$$\bar{S} = \frac{\Sigma AS}{\Sigma A} = \frac{.0619}{.301} = .2056 \text{ IN.}$$

$$\bar{D} = \frac{\Sigma AD}{\Sigma A} = \frac{.1740}{.301} = .578 \text{ IN.}$$

$$I_{S-S} = .01541 + .1386 - .578\,(.1740) = .0534 \text{ IN.}^4 \quad (.1006)$$

$$I_{D-D} = .00259 + .0179 - .2056\,(.0619) = .0078 \text{ IN.}^4 \quad (.0127)$$

CALC			REVISED	DATE	NOSE GEAR XVSA	1511L
CHECK					DEFLECTION ANALYSIS	RYAN
APR					H. W. LOUD MACHINE WORKS, INC. 887 EAST SECOND ST., POMONA, CALIFORNIA	PAGE 127
APR						

INNER CYLINDER

INERTIA CALCULATIONS - CONT'D

TAKEN AT 10.50 IN. FROM ℄ AXLE (9.495)

O.D. = 2.615	5.371	2.2954
I.D. = 2.290	4.119	1.3499
2t = .325	A = 1.252 IN.^{2}	I = .9445 IN.^{4}
t = .1625		

TAKEN AT 13.437 IN. FROM ℄ AXLE

O.D. = 2.491	4.873	1.8900
I.D. = 2.290	4.119	1.3499
2t = .201	A = .754 IN.^{2}	I = .5401 IN.^{4}
t = .1005		

TAKEN AT 17.435 IN. FROM ℄ AXLE

O.D. = 2.491	4.873	1.8900
I.D. = 2.251	3.980	1.2603
2t = .240	A = .893 IN.^{2}	I = .6297 IN.^{4}
t = .120		

TAKEN AT 21.375 IN. FROM ℄ AXLE

I = .6297 IN.^{4}

CALC	[signature]		REVISED	DATE	NOSE GEAR XV5A	1511L
CHECK					DEFLECTION ANALYSIS	RYAN
APR					H. W. LOUD MACHINE WORKS, INC. 887 EAST SECOND ST., POMONA, CALIFORNIA	PAGE 128
APR						

INNER CYLINDER

INERTIA CALCULATIONS - CONT'D

TAKEN 25.075 IN. FROM ℄ AXLE

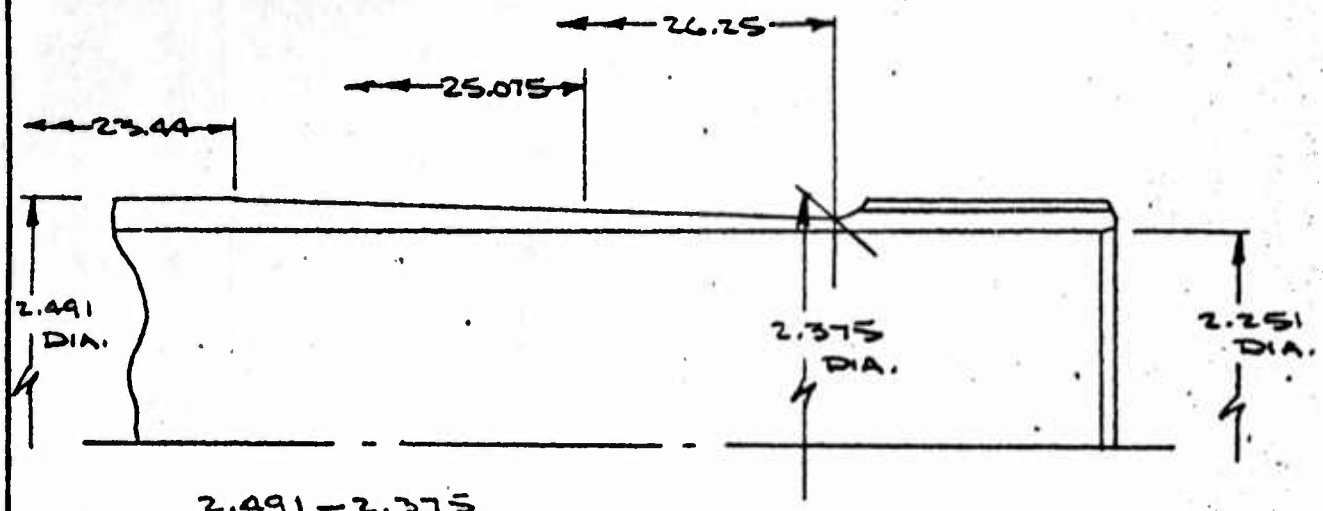

$$\Delta t = \frac{\frac{2.491 - 2.375}{2}}{26.25 - 23.44} \times (25.075 - 23.44) = .0337$$

$\therefore$ O.D. $= 2.491 - 2(.0337) = 2.424$

O.D. = 2.424	4.615	1.6946
I.D. = 2.251	3.980	1.2603
$2t = .173$	$A = .635$ IN.^{2}	$I = .4343$ IN.^{4}
$t = .0865$		

CALC	Bartlett		REVISED	DATE	NOSE GEAR XV5A	1511L
CHECK					DEFLECTION ANALYSIS	RYAN
APR					H. W. LOUD MACHINE WORKS, INC. 807 EAST SECOND ST., POMONA, CALIFORNIA	PAGE 129
APR						

INNER CYLINDER — TURNING (FWD) F.E.-5.3

1	2	3	4	5	6	7	8	9	1
PANEL	$\bar{z}$ POINT O TO L.H. EDGE	M (ULT) $\times 10^{-3}$	I	EI $\times 10^{6}$	$\frac{M}{EI}$	L PANEL LENGTH	A $\times 10^{3}$ PANEL AREA	$\bar{z}$ CENTROID FROM R.H EDGE	$\bar{z}$ +
				④ × 29	③/⑤		$\frac{(⑥_1 + ⑥_2)⑦}{2}$		②
1	0	12.656 14.500	* .250	7.250	1.746 2.000	4.000	7.492	2.040	2.
2	4	14.500 6.000	* .250	7.250	2.000 2.207	4.000	8.414	2.036	6.
3	8	16.000 17.523	.9445	27.391	.584 .640	2.938	1.798	1.495	TAK 10.4 9.4
4	10.938	17.923 23.775	.5401	15.663	1.144 1.518	4.769	6.348	2.499	13.
5	15.707	23.775 16.000	.6297	18.261	1.302 .876	3.700	4.029	1.728	17.
6	19.407	16.000 6.500	.6297	18.261	.876 .356	4.593	2.829	1.968	21
7	24.000	6.500 0	.4343	12.595	.516 0	3.225	.832	1.075	25

* ASSUMED 'I' VALUES

A

RNING (FWD) F.E.-5.3 (12500#)

6	7	8	9	10	11	12	13	14	15
M/EI	L PANEL LENGTH	A $\times 10^3$ PANEL AREA	$\bar{z}$ CENTROID FROM R.H EDGE	$z + \bar{z}$	$A(z+\bar{z}) \times 10^3$	$\Sigma [A(z+\bar{z})]$	Σ A (SLOPE)	Σ EA	Δ W REL TO P
(3)/(5)		$\frac{(6)_1+(6)_2}{2}(7)$		(2)+(9)	(8)×(10)	SUM (11) FROM BOTTOM	SUM (8) FROM BOTTOM	(2)×(13)	(12)-
.746 .000	4.000	7.492	2.040	2.040	15.284	.320	.032	0	.32
.000 .207	4.000	8.414	2.036	6.036	50.787	.305	.024	.0960	.20
584 640	2.938	1.798	1.495	TAKE AT 10.80 9.495	17.072	.254	.0158	.1264	.12
144 518	4.769	6.348	2.499	13.437	85.298	.237	.014	.1531	.08
302 876	3.700	4.029	1.728	17.435	70.246	.152	.0077	.1209	.07
376 356	4.593	2.829	1.968	21.395	60.470	.081	.0037	.072	.00
516 0	3.225	.832	1.075	25.075	20.862	.021	.0008	.0192	.00

B

PAGE 1

TURNING (FWD) F.E. -5.3
12500 #

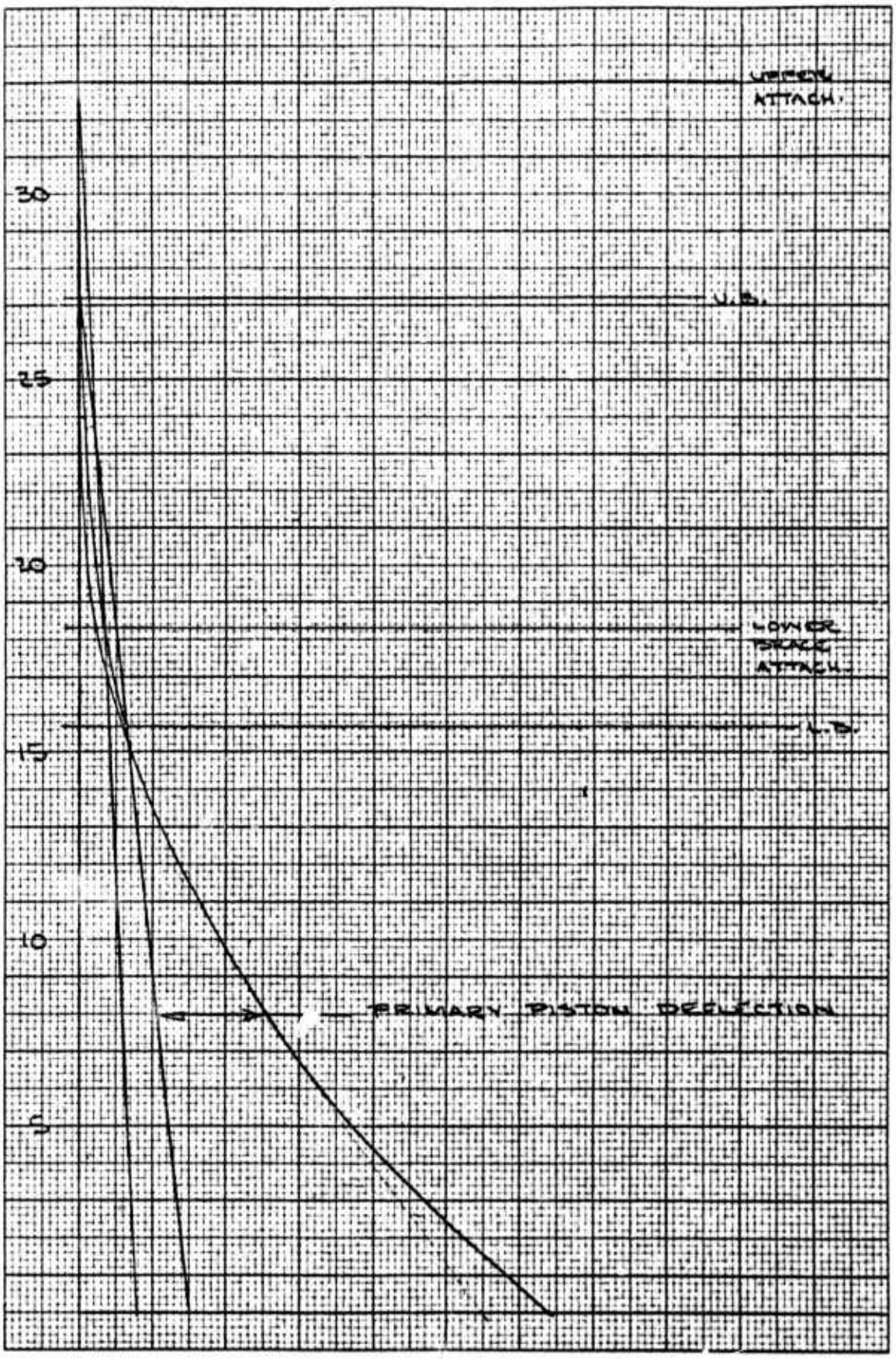

TURNING (FWD) F.C. - 5.3
12500#

FIG. V

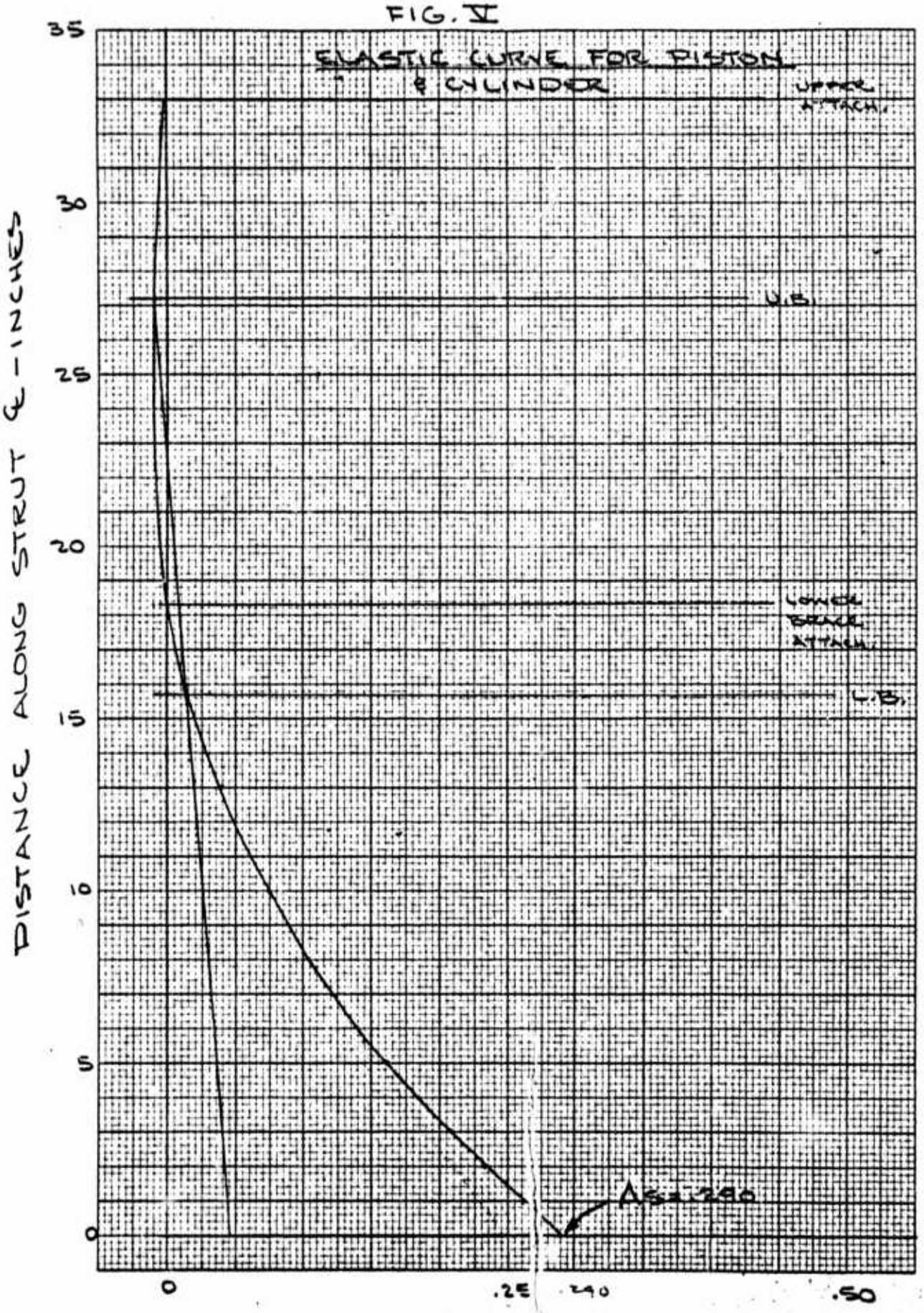

SECTION 3

ATTACH POINT AND BEARING REACTIONS INCLUDING SECONDARY BENDING

CALC			REVISED	DATE	NOSE GEAR XVSA DEFLECTION ANALYSIS	1511L
CHECK						RYAN
APR						
APR					H. W. LOUD MACHINE WORKS, INC. 887 EAST SECOND ST. POMONA, CALIFORNIA	PAGE 133

UNIT SOLUTION

INCREASE IN REACTIONS DUE TO BENDING

$$\Delta M_{V_o} = -\int_S D_o + \int_D S_o$$

$$\Delta M_{D_o} = \int_S V_o$$

$$\Delta M_{S_o} = -\int_D V_o$$

$$\Delta P_{\overline{BD}} = -.0783\ \Delta M_{S_o}$$

$$\Delta R_{VF} = -.0608\ \Delta M_{D_o}$$

$$\Delta R_{VE} = .0608\ \Delta M_{D_o}$$

$$\Delta R_{DF} = .0608\ \Delta M_{V_o}$$

$$\Delta R_{DE} = -.0608\ \Delta M_{V_o}$$

$$\Delta R_{S\overline{EF}} = -S_o$$

$$\Delta R_T = -(1/f)\ \Delta M_{V_o}$$

$$\Delta R_{DUB} = -\left(\frac{1}{a}\right) \Delta M_{S_o}$$

$$\Delta R_{DLB} = (1/a)\ \Delta M_{S_o}$$

$$\Delta R_{SUB} = -(k/fa)\ \Delta M_{V_o} + (1/a)\ \Delta M_{D_o}$$

$$\Delta R_{SLB} = (m/fa)\ \Delta M_{V_o} - (1/a)\ \Delta M_{D_o}$$

CALC	Bacchi		REVISED	DATE
CHECK				
APR				
APR				

NOSE GEAR XV5A — 1511L

DEFLECTION ANALYSIS — RYAN

H. W. LOUD MACHINE WORKS, INC.
887 EAST SECOND ST., POMONA, CALIFORNIA

PAGE 134

INTERNAL REACTIONS - INCLUDING SECONDARY BENDING

$$R_T = -(2.00/f)S_o - (1/f)M_{V_o} + (1/f)(\Delta_S D_o) - (1/f)(\Delta_D S_o)$$

$$R_{D_{UB}} = (2.00/a)V_o + (b/a)D_o - (1/a)M_{S_o} + 1/a(\Delta_D V_o)$$

$$R_{D_{LB}} = -(2.00/a)V_o - (27.225/a)D_o + (1/a)M_{S_o} - 1/a(\Delta_D V_o)$$

$$R_{S_{LB}} = -S_o\left[\frac{27.225 - 2.00(m/f)}{a}\right] + (m/fa)M_{V_o} - (1/a)M_{D_o} - m/fa(\Delta_S D_o) + m/fa(\Delta_D S_o) - 1/a(\Delta_S V_o)$$

$$R_{S_{UB}} = S_o\left[\frac{b - 2.00(k/f)}{a}\right] - (k/fa)M_{V_o} + (1/a)M_{D_o} + k/fa(\Delta_S D_o) - k/fa(\Delta_D S_o) + 1/a(\Delta_S V_o)$$

CALC	Bartlett		REVISED	DATE	NOSE GEAR XVSA	1511L
CHECK					DEFLECTION ANALYSIS	RYAN
APR						
APR					H. W. LOUD MACHINE WORKS, INC. 887 EAST SECOND ST., POMONA, CALIFORNIA	PAGE 135

EXTERNAL REACTIONS - INCLUDING SECONDARY BENDING

$$P_{BD} = .1568\,V_o + .0783\,(C)\,D_o - .0783\,M_{So} + .0783\,(\Delta_D V_o)$$

$$R_{VF} = -.5565\,V_o - .0608\,(C)\,S_o - .0282\,(C)\,D_o - .0608\,M_{Do} + .0282\,M_{So} - .0608\,(\Delta_S V_o)$$

$$R_{VE} = -.5565\,V_o + .0608\,(C)\,S_o - .0282\,(C)\,D_o + .0608\,M_{Do} + .0282\,M_{So} + .0608\,(\Delta_S V_o)$$

$$R_{DF} = .0544\,V_o + .1217\,S_o + [.0272\,(C) - .500]\,D_o - .0272\,M_{So} + .0608\,M_{Vo} - .0608\,(\Delta_S D_o) + .0608\,(\Delta_D S_o)$$

$$R_{DE} = .0544\,V_o - .1217\,S_o + [.0272\,(C) - .500]\,D_o - .0608\,M_{Vo} - .0272\,M_{So} + .0608\,(\Delta_S D_o) - .0608\,(\Delta_D S_o)$$

$$R_{SEF} = -S_o + 0 = -S_o$$

CALC	Brodie		REVISED	DATE	NOSE GEAR XVSA	1511L
CHECK					DEFLECTION ANALYSIS	RYAN
APR						
APR					H. W. LOUD MACHINE WORKS, INC. 887 EAST SECOND ST., POMONA, CALIFORNIA	PAGE 136

TABLE XI - MATRIX

STRUT REACTIONS

INCLUDING SECONDARY BENDING

CALC	[illegible]		REVISED	DATE	NOSE GEAR XV5A	1511L
CHECK					DEFLECTION ANALYSIS	RYAN
APR						
APR					H. W. LOUD MACHINE WORKS, INC.	PAGE
					867 EAST SECOND ST., POMONA, CALIFORNIA	137

STRUT REACTIONS

WITH SECONDARY BENDING

ATTACH POINT REACTIONS

GENERAL MATRIX

CONDITION: ALL

	V_o	D_o	S_o	M_{O_o}	P_{BD}	ΔP_{BD}	Σ
P_{BD}	.1568	.0783(c)					
ΔP_{BD}	.0783ΔD						
ΣP_{BD}							
R_{VE}	-.500		.0608 (c)	.0608	-.360		
ΔR_{VE}	.0608ΔS					-.360	
ΣR_{VE}							
R_{VF}	-.500		-.0608 (c)	-.0608	-.360		
ΔR_{VF}	-.0608ΔS					-.360	
ΣR_{VF}							
R_{DE}		-.500	-.1217		.347		
ΔR_{DE}		.0608ΔS	-.0608ΔD			.347	
ΣR_{DE}							
R_{DF}		-.500	.1217		.347		
ΔR_{DF}		-.0608ΔS	.0608ΔD			.347	
ΣR_{DF}							
$R_{S_{CF}}$			-1.000				

			REVISED	DATE
CALC	Lockit			
CHECK				
APR				
APR				

NOSE GEAR XV5A

DEFLECTION ANALYSIS

H. W. LOUD MACHINE WORKS, INC.
887 EAST SECOND ST., POMONA, CALIFORNIA

1511L

RYAN

STRUT REACTIONS CONT'D
WITH SECONDARY BENDING

PISTON REACTIONS

GENERAL, MATRIX

CONDITION: ALL

	V_o	D_o	S_o	M_{D_o}	P_{BD}	ΔP_{BD}	Σ
R_T			$-2.00/f$				
ΔR_T		$1/f\ \Delta s$	$-1/f\ \Delta D$				
ΣR_T							
R_{OUB}	$2.00/a$	b/a					
ΔR_{OUB}	$1/a\ \Delta D$						
ΣR_{OUB}							
R_{OLB}	$-2.00/a$	$-\frac{27.225}{a}$					
ΔR_{OLB}	$-1/a\ \Delta D$						
ΣR_{OLB}							
R_{SUB}			$\frac{b-2.00\,k/f}{a}$	$1/q$			
ΔR_{SUB}	$1/a\ \Delta s$	$k/fa\ \Delta s$	$-k/fa\ \Delta D$				
ΣR_{SUB}							
R_{SLB}			$2.00\,m/fa$ $-27.225/a$	$-1/a$			
ΔR_{SLB}	$-1/a\ \Delta s$	$-m/fa\ \Delta s$	$m/fa\ \Delta D$				
ΣR_{SLB}							

CALC	[illegible]		REVISED	DATE	NOSE GEAR XV5A		1511L
CHECK					DEFLECTION ANALYSIS		RYAN
APR					H. W. LOID MACHINE WORKS, INC.		PAGE
APR					887 EAST SECOND ST., POMONA, CALIFORNIA		139

STRUT REACTIONS

WITH SECONDARY BENDING

ATTACH POINT REACTIONS

DETAIL MATRIX

CONDITION: F.E. -1.6

	V_o	D_o	S_o	M_{o_o}	P_{BD}	ΔP_{BD}	Σ
P_{BD}	.1568	2.8775					
ΔP_{BD}	.0783ΔD						
ΣP_{BD}							
R_{VE}	-.500		2.2344	.0608	-.360		
ΔR_{VE}	.0608ΔS					-.360	
ΣR_{VE}							
R_{VF}	-.500		-2.2344	-.0608	-.360		
ΔR_{VF}	-.0608ΔS					-.360	
ΣR_{VF}							
R_{DE}		-.500	-.1217		.347		
ΔR_{DE}		.0608ΔS	-.0608ΔD			.347	
ΣR_{DE}							
R_{DF}		-.500	.1217		.347		
ΔR_{DF}		-.0608ΔS	.0608 ΔD			.347	
ΣR_{DF}							
R_{SCF}							

CALC	[illegible]		REVISED	DATE	NOSE GEAR XV5A	1511L
CHECK					DEFLECTION ANALYSIS	RYAN
APR						
APR					W. LOUD MACHINE WORKS, INC.	PAGE
					661 EAST SECOND ST., POMONA, CALIFORNIA	140

STRUT REACTIONS CONT'D
WITH SECONDARY BENDING

PISTON REACTIONS

DETAIL MATRIX

CONDITION: F.E. -1.6

	V_o	D_o	S_o	M_{Do}	P_{BD}	ΔP_{BD}	Σ
R_T			-.2686				
ΔR_T		.1343Δ_S	-.1343Δ_D				
ΣR_T							
R_{DUB}	.2558	2.4823					
ΔR_{DUB}	.1279Δ_D						
ΣR_{DUB}							
R_{DLB}	-.2558	-3.4823					
ΔR_{DLB}	-.1279Δ_D						
ΣR_{DLB}							
R_{SUB}			2.3240	.1279			
ΔR_{SUB}	.1279Δ_S	.0792Δ_S	-.0792Δ_D				
ΣR_{SUB}							
R_{SLB}			-3.055	-.1279			
ΔR_{SLB}	-.1279Δ_S	-.2135Δ_S	.2135Δ_D				
ΣR_{SLB}							

CALC	[illegible]		REVISED	DATE	NOSE GEAR XV5A	1511L
CHECK					DEFLECTION ANALYSIS	RYAN
APR						
APR					H. W. LOUD MACHINE WORKS, INC. 807 EAST SECOND ST., POMONA, CALIFORNIA	PAGE 141

STRUT REACTIONS

WITH SECONDARY BENDING

ATTACH POINT REACTIONS

DETAIL MATRIX.

CONDITION: F.E.-5.3

	V_o	D_o	S_o	M_{o_o}	P_{BD}	ΔP_{BD}	Σ
P_{BD}	.1568	2.5878					
ΔP_{BD}	$.0783\Delta D$						
ΣP_{BD}							
R_{VE}	-.500		2.0094	.0608	-.360		
ΔR_{VE}	$-.0608\Delta S$					-.360	
ΣR_{VE}							
R_{VF}	-.500		-2.0094	-.0608	-.360		
ΔR_{VF}	$-.0608\Delta S$					-.360	
ΣR_{VF}							
R_{DE}		-.500	-.1217		.347		
ΔR_{DE}		$.0608\Delta S$	$-.0608\Delta D$			.347	
ΣR_{DE}							
R_{DF}		-.500	.1217		.347		
ΔR_{DF}		$-.0608\Delta S$	$.0608\Delta D$			.347	
ΣR_{DF}							
R_{SEF}			-1.000				

CALC		REVISED	DATE	NOSE GEAR XV5A DEFLECTION ANALYSIS	1511L
CHECK					RYAN
APR.				H. W. LOUDON MACHINE WORKS, INC. 807 EAST SECOND ST., POMONA, CALIFORNIA	PAGE 142
APR					

STRUT REACTIONS CONT'D
WITH SECONDARY BENDING

PISTON REACTIONS

DETAIL MATRIX

CONDITION: F.E. - 5.3

	V_o	D_o	S_o	M_{D_o}	P_{BD}	ΔP_{BD}	Σ
R_T			-.2340				
ΔR_T		.1170 ΔS	-.1170 ΔD				
ΣR_T							
R_{DUB}	.1736	1.3637					
ΔR_{DUB}	.0868 ΔD						
ΣR_{DUB}							
R_{DLB}	-.1736	-2.3637					
ΔR_{DLB}	-.0868 ΔD						
ΣR_{DLB}							
R_{SUB}			1.2885	.0868			
ΔR_{SUB}	.0868 ΔS	.0376 ΔS	-.0376 ΔD				
ΣR_{SUB}							
R_{SLB}			-2.0545	-.0868			
ΔR_{SLB}	-.0868 ΔS	-.1546 ΔS	.154- ΔD				
ΣR_{SLB}							

CALC			REVISED	DATE
CHECK				
APR				
APR				

NOSE GEAR XVSA — 1511L
DEFLECTION ANALYSIS — RYAN
H. W. LOUD MACHINE WORKS, INC.
257 EAST SECOND ST., POMONA, CALIFORNIA
PAGE 143

STRUT REACTIONS

WITH SECONDARY BENDING

ATTACH POINT REACTIONS

EXTENDED MATRIX

CONDITION: SPINUP (FWD) F.E. -1.6 9200#

	V_o	D_o	S_o	M_{o_o}	P_{BD}	ΔP_{BD}	Σ
	5827	3600	0	0	11273	559	
P_{BD}	914	10359					11273
ΔP_{BD}	559						559
ΣP_{BD}							11832
R_{VE}	-2914				-4058		-6972
ΔR_{VE}						-201	-201
ΣR_{VE}							-7173
R_{VF}	-2914				-4058		-6972
ΔR_{VF}						-201	-201
ΣR_{VF}							-7173
R_{DE}		-1800			3912		2112
ΔR_{DE}						194	194
ΣR_{DE}							2306
R_{DF}		-1800			3912		2112
ΔR_{DF}						194	194
ΣR_{DF}							2306
R_{SLF}							

			REVISED	DATE
CALC	Boschek			
CHECK				
APR				
APR				

NOSE GEAR XV5A

DEFLECTION ANALYSIS

H. W. LOUD MACHINE WORKS, INC.
[illegible] EAST SECOND ST., POMONA, CALIFORNIA

1511L

RYAN

STRUT REACTIONS CONT'D
WITH SECONDARY BENDING

PISTON REACTIONS

EXTENDED MATRIX

CONDITION: SPINUP (FWD) F.E.-1.6 9200#

	V_o	D_o	S_o	M_{D_o}	P_{BD}	ΔP_{BD}	Σ
	5827	3600	0	0			
R_T							
ΔR_T		0					
ΣR_T							
R_{OUB}	1491	8936					10427
ΔR_{OUB}	915						915
ΣR_{OUB}							11342
R_{OLB}	-1491	-12536					-14027
ΔR_{OLB}	-915						-915
ΣR_{OLB}							-14942
R_{SUB}							
ΔR_{SUB}	0	0					
ΣR_{SUB}							
R_{SLB}							
ΔR_{SUB}	0	0					
ΣR_{SUB}							

			REVISED	DATE
CALC				
CHECK				
APR				
APR				

NOSE GEAR XV5A
DEFLECTION ANALYSIS

H. W. LOUD MACHINE WORKS, INC.
887 EAST SECOND ST., POMONA, CALIFORNIA

1511L
RYAN
PAGE 14

STRUT REACTIONS

WITH SECONDARY BENDING

ATTACH POINT REACTIONS

EXTENDED MATRIX

CONDITION: SPRINGBACK (FWD) F.E. -1.6 9200*

	V_o	D_o	S_o	M_{o_o}	P_{BD}	ΔP_{BD}	Σ
	6205	-4441			-11806	-558	
P_{BD}	973	-12779					-11806
ΔP_{BD}	-558						-558
ΣP_{BD}							-12364
R_{VE}	-3103				4250		1147
ΔR_{VE}	0					201	201
ΣR_{VE}							1348
R_{VF}	-3103				4250		1147
ΔR_{VF}	0					201	201
ΣR_{VF}							1348
R_{DE}		2221			-4097		-1876
ΔR_{DE}		0				-194	-194
ΣR_{DE}							-2070
R_{DF}		2221			-4097		-1876
ΔR_{DF}		0				-194	-194
ΣR_{DF}							-2070
R_{SCF}							

CALC	Bartlett		REVISED	DATE	NOSE GEAR XV5A	1511L
CHECK					DEFLECTION ANALYSIS	RYAN
APR					H. W. LOUD MACHINE WORKS, INC.	PAGE
APR					887 EAST SECOND ST., POMONA, CALIFORNIA	146

STRUT REACTIONS CONT'D
WITH SECONDARY BENDING

PISTON REACTIONS

EXTENDED MATRIX

CONDITION: SPRINGBACK (FWD) F.E.-1.6 9200#

	V_o	D_o	S_o	M_{D_o}	P_{BD}	ΔP_{BD}	Σ
	6205	-4441					
R_T							
ΔR_T		0					
ΣR_T							
R_{OUB}	1587	-11024					-9437
ΔR_{OUB}	-906						-906
ΣR_{OUB}							-10343
R_{OLB}	-1587	15465					13878
ΔR_{OLB}	906						906
ΣR_{OLB}							14784
R_{SUB}							
ΔR_{SUB}	0	0					
ΣR_{SUB}							
R_{SLB}							
ΔR_{SLB}	0	0					
ΣR_{SLB}							

CALC	Rachik		REVISED	DAT	NOSE GEAR XV5A — DEFLECTION ANALYSIS — 1511L — RYAN
CHECK					
APR					
APR					
					H. W. LOUD MACHINE WORKS, INC. 867 East Second St., Pomona, California — PAGE 147

STRUT REACTIONS

WITH SECONDARY BENDING

ATTACH POINT REACTIONS

EXTENDED MATRIX

CONDITION: TURNING (FWD) F.E.- 5.3 12500#

	V_0	D_0	S_0	M_{D_0}	P_{BD}	ΔP_{BD}	Σ
	3193	-279	1602	12656	-221	0	
P_{BD}	501	-722					-221
ΔP_{BD}	0						
ΣP_{BD}							-221
R_{VE}	-1597		3219	769	80		2471
ΔR_{VE}	56					0	56
ΣR_{VE}							2527
R_{VF}	-1597		-3219	-769	80		-5505
ΔR_{VF}	-56					0	-56
ΣR_{VF}							-5561
R_{DE}		140	-195		-77		-132
ΔR_{DE}		-5	0			0	-5
ΣR_{DE}							-137
R_{DF}		140	195		-77		258
ΔR_{DF}		5	0			0	5
ΣR_{DF}							263
R_{SEF}			-1602				-1602

CALC	[illegible]		REVISION	DATE	NOSE GEAR XV5A DEFLECTION ANALYSIS	1511L
CHECK						RYAN
APR					H W LOUD MACHINE WORKS, INC 807 EAST SECOND ST POMONA, CALIFORNIA	PAGE 148
APR						

STRUT REACTIONS CONT'D
WITH SECONDARY BENDING

PISTON REACTIONS

EXTENDED MATRIX

CONDITION: TURNING (FWD) F.E.-5.3 12500#

	V_o	D_o	S_o	M_{D_o}	P_{BD}	ΔP_{BD}	Σ
	3193	-279	1602	12656			
R_T			-375				-375
ΔR_T		-9.50	0				-9.5
ΣR_T							-385
R_{DUB}	554	-380					174
ΔR_{DUB}	0						
ΣR_{DUB}							174
R_{DLB}	-554	659					105
ΔR_{DLB}	0						
ΣR_{DLB}							105
R_{SUB}			2064	1099			3163
ΔR_{SUB}	80	-3.041	0				77
ΣR_{SUD}							3240.
R_{SLB}			-3291	-1099			-4390
ΔR_{SLB}	-80	12.50	0				-68
ΣR_{SLB}							-4458

CALC	Burkhart		REVISED	DATE	NOSE GEAR XV5A	1511L
CHECK					DEFLECTION ANALYSIS	RYAN
APR					H W LOUD MACHINE WORKS, INC. 887 EAST SECOND ST., POMONA, CALIFORNIA	PAGE 149
APR						

SECTION 4

CYLINDER ANALYSIS

CALC	Bartlett		REVISED	DATE	NOSE GEAR XV5A	1511L
CHECK					CYLINDER ANALYSIS	RYAN
APR						
APR					H. W. LOUD MACHINE WORKS, INC. 667 East Second St., Pomona, California	PAGE 150

CYLINDER (1511L104)

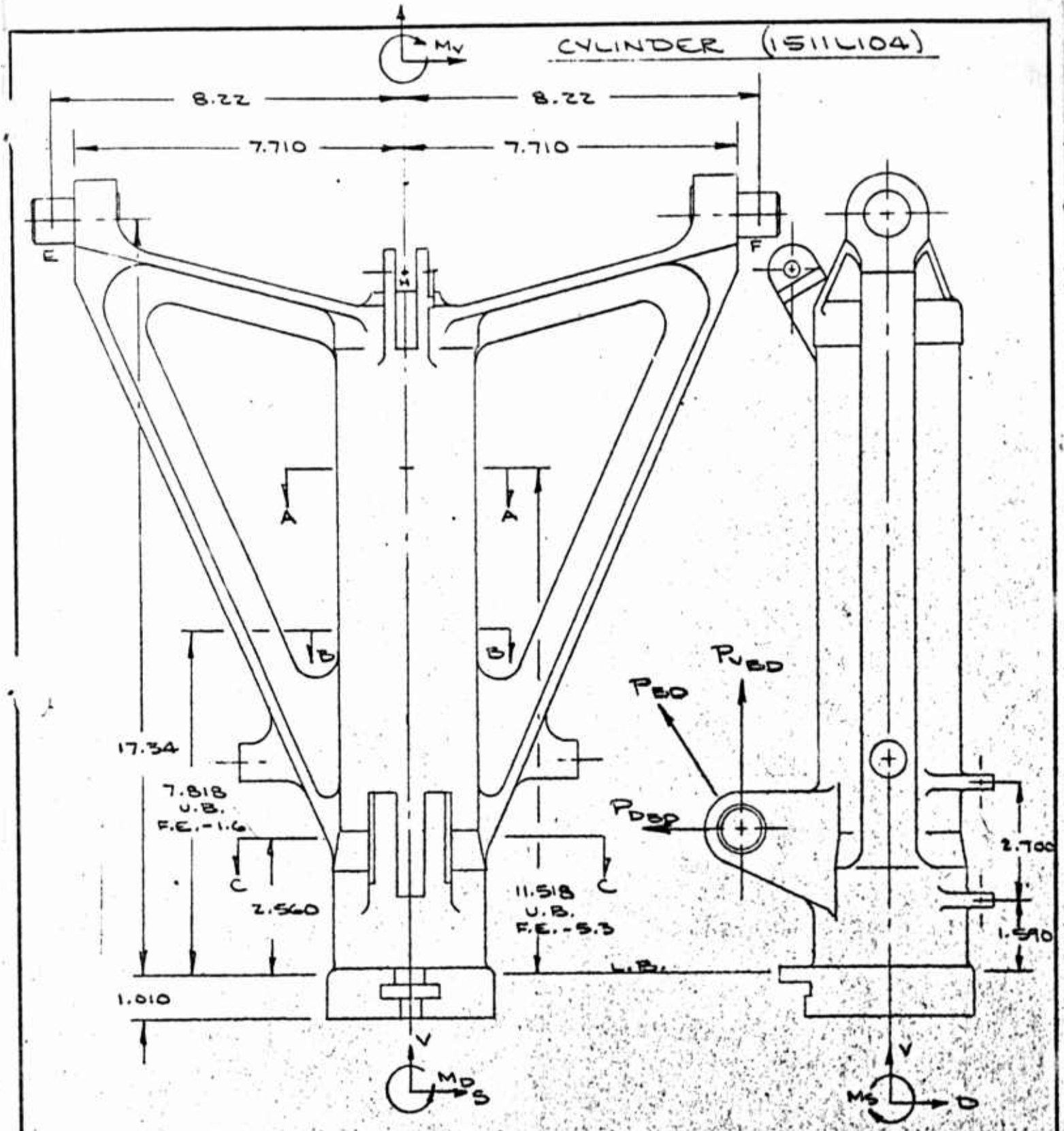

FIG. 11

LOADING

FIG. VII

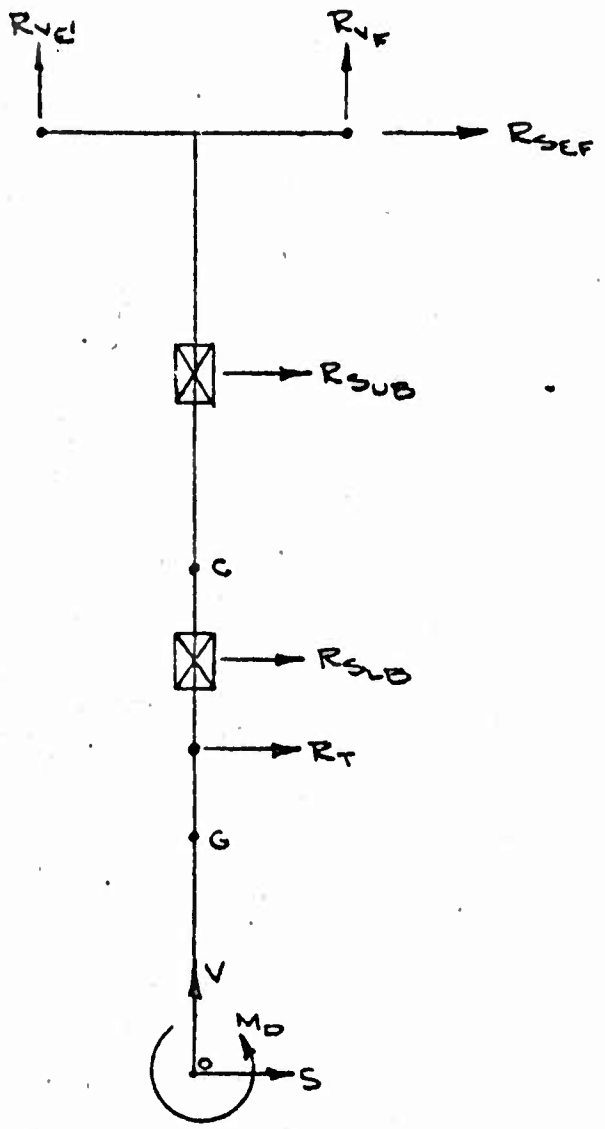

$P_{DBD} = -P_{BD} \sin \alpha$

$= -P_{BD} \times .6947$

$P_{VBD} = P_{BD} \cos \alpha$

$= P_{BD} \times .7193$

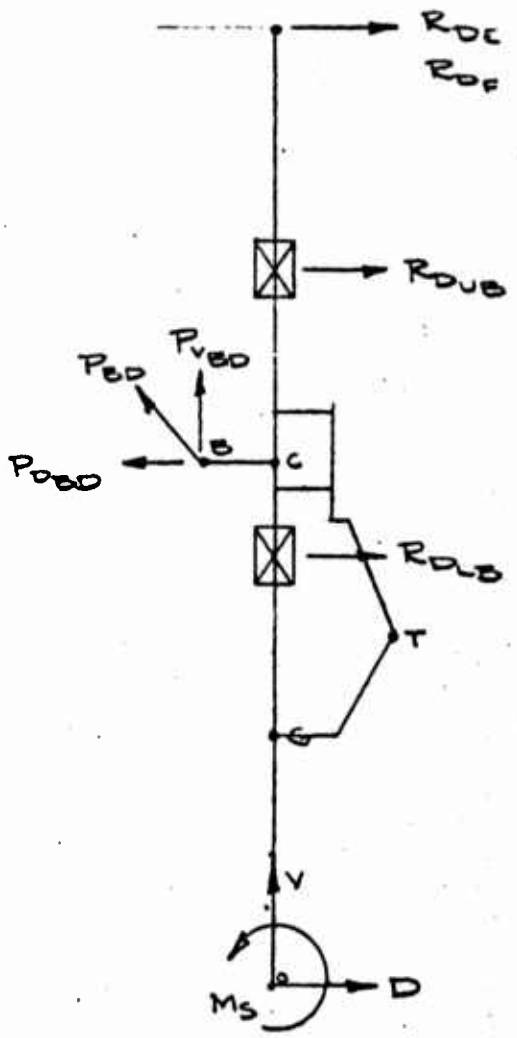

CALC	[illegible]		REVISED	DATE	NOSE GEAR XV5A	1511L
CHECK					CYLINDER ANALYSIS	RYAN
APR					H. W. LOUD MACHINE WORKS, INC. 687 EAST SECOND ST., POMONA, CALIFORNIA	PAGE 152
APR						

$R_{FJ} = 1.243\, R_{VF} - .333\, R_{SF}$

$R_{EK} = 1.243\, R_{VE}$

FOR SPINUP F.E.-1.6 (FWD) 9200#

$R_{FJ} = 1.243(-7173) - .333(0) = -8916$

$R_{EK} = 1.243(-7173) = -8916$

FOR SPRINGBACK F.E -1.6 (FWD) 9200#

$R_{FJ} = 1.243(1348) - .333(0) = 1676$

$R_{EK} = 1.243(1348) = 1676$

FOR TURNING F.E. -5.3 (FWD) 12500#

$R_{FJ} = 1.243(-5561) - .333(-1602) = -6379$

$R_{EK} = 1.243(2527) = 3141$

CALC	Fischl		REVISED	DATE	NOSE GEAR XVSA	1511L
CHECK					CYLINDER ANALYSIS	RYAN
APR						
APR					H.W. LOUD MACHINE WORKS, INC. 887 EAST SECOND ST., POMONA, CALIFORNIA	PAGE 153

CYLINDER BENDING MOMENT WITH SECONDARY BENDING

EXTENDED MATRIX

CONDITION - SPINUP (FWD) F.E. -1.6 9200#

		R_{DLB}	R_{SLB}	P_{DB}	R_{DUB}	R_{SUB}	R_{FJ}	R_{EK}	R_{VE}	R_{VF}	R_T	P_{DOOR}
	Σ	14942	0	11832	-11342	0	-8916	-8916	-7173	-7173	0	300
~~M_{DN-}~~												
M_{SN-}	-23758	-23758										
M_{DN+}												
M_{SN+}	-23758	-23758										
~~M_{DC-}~~												
M_{SC-}	-38252	-38252										
M_{DC+}												
M_{SC+}	-8435	-38252		29817								
M_{DM}												
M_{SM}	-20074	-64101		44027								
M_{DL-}												
M_{SL-}	-20440	-64893		44453								
M_{DL+}	0						-19794	19794				
M_{SL+}	-20440	-64893		44453								
M_{DUB}	0						-32401	32401				
M_{SUB}	-44868	-116817		72992								
M_{DEF-}	0						-66932	66932				
M_{SEF}	~0~	-259139		151189	108033							
M_{DEF+}	0		0			0			58962	-58962		

CALC [signature]
CHECK
APR
APR
REVISED
DATE

NOSE GEAR XV5A

CYLINDER ANALYSIS

H W LOUD MACHINE WORKS, INC.
887 EAST SECOND ST., POMONA, CALIFORNIA

1511L

RYAN

PAGE 154

(WITH SECONDARY BENDING)

SPINUP (TWO) F.E. - 1.6 9200#.

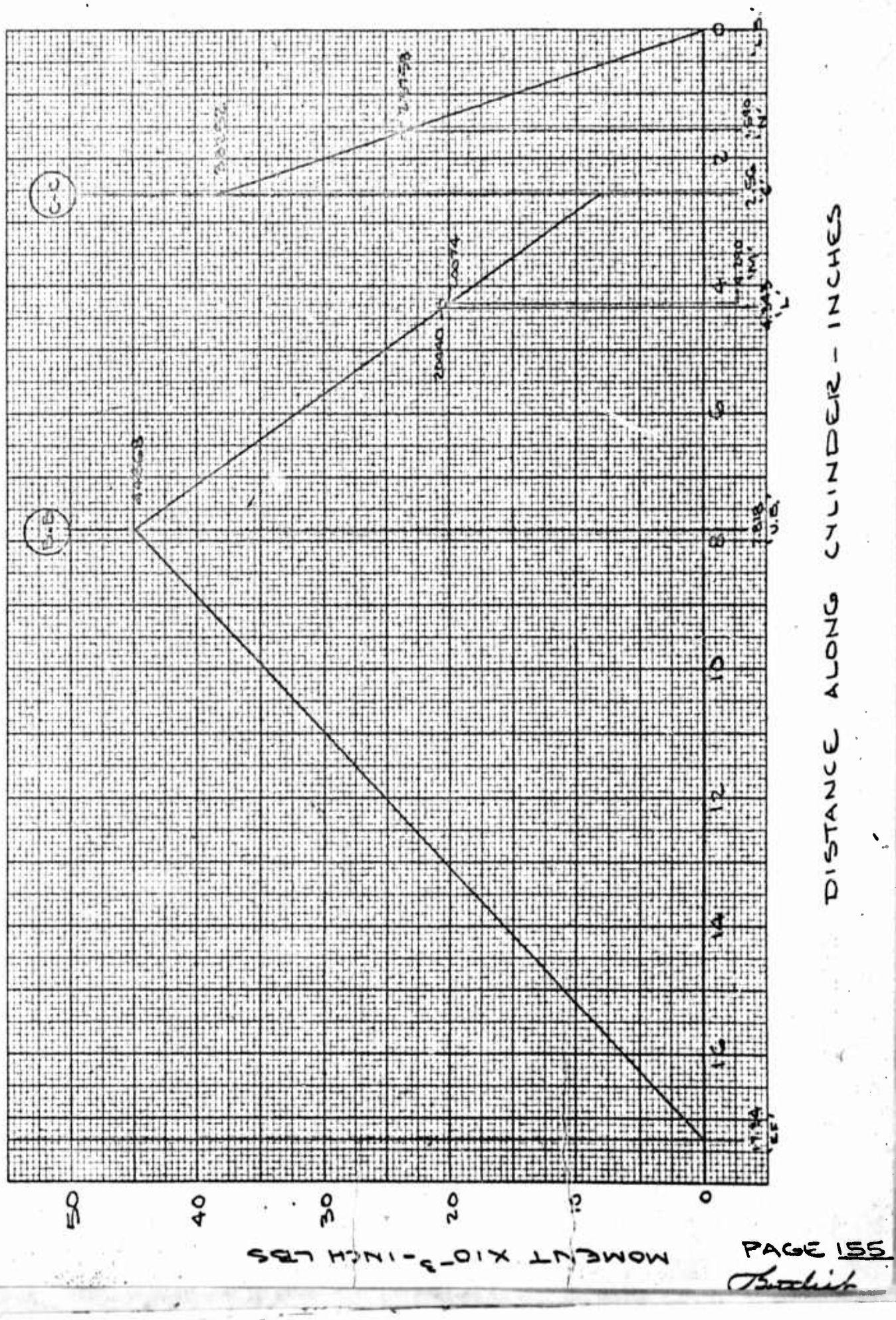

CYLINDER BENDING MOMENT WITH SECONDARY BENDING

EXTENDED MATRIX

CONDITION - SPRINGBACK (FWD) F.E.- 1.6 9200#

		R_{DLB}	R_{SLB}	P_{DB}	R_{DUB}	R_{SUB}	R_{FJ}	R_{EK}	R_{VE}	R_{VF}	R_T	P_{DOOR}
	Σ	-14784	0	-12364	10343	0	1676	1676	1348	1348	0	
~~M_{DN-}~~												
M_{SN-}	23507	23507										
M_{DN+}												
M_{SN+}	23507	23507										
~~M_{DC-}~~												
M_{SC-}	37847	37847										
M_{DC+}												
M_{SC+}	6690	37847		-31157								
M_{DM}												
M_{SM}	17417	63423		-46006								
M_{DL-}												
M_{SL-}	17755	64207		-46452								
M_{DL+}							3721	-3721				
M_{SL+}	17755	64207		-46452								
M_{DUB}	0						6091	-6091				
M_{SUB}	39307	115581		-76274								
M_{DEF}	0						12582	-12582				
M_{SEF}	~0~	256399		-157987	-98517							
M_{DEF+}	0								-11081	11081		

CALC [signature] CHECK APR APR

REVISED DATE

NOSE GEAR XV5A

CYLINDER ANALYSIS

H. W. LOUD MACHINE WORKS, INC.
887 EAST SECOND ST., POMONA, CALIFORNIA

1511L

RYAN

PAGE 156

CLEARPRINT CHARTS

(WITH SECONDARY BENDING)
SPRINGBACK (FWD) F.E.-1.6 9200#

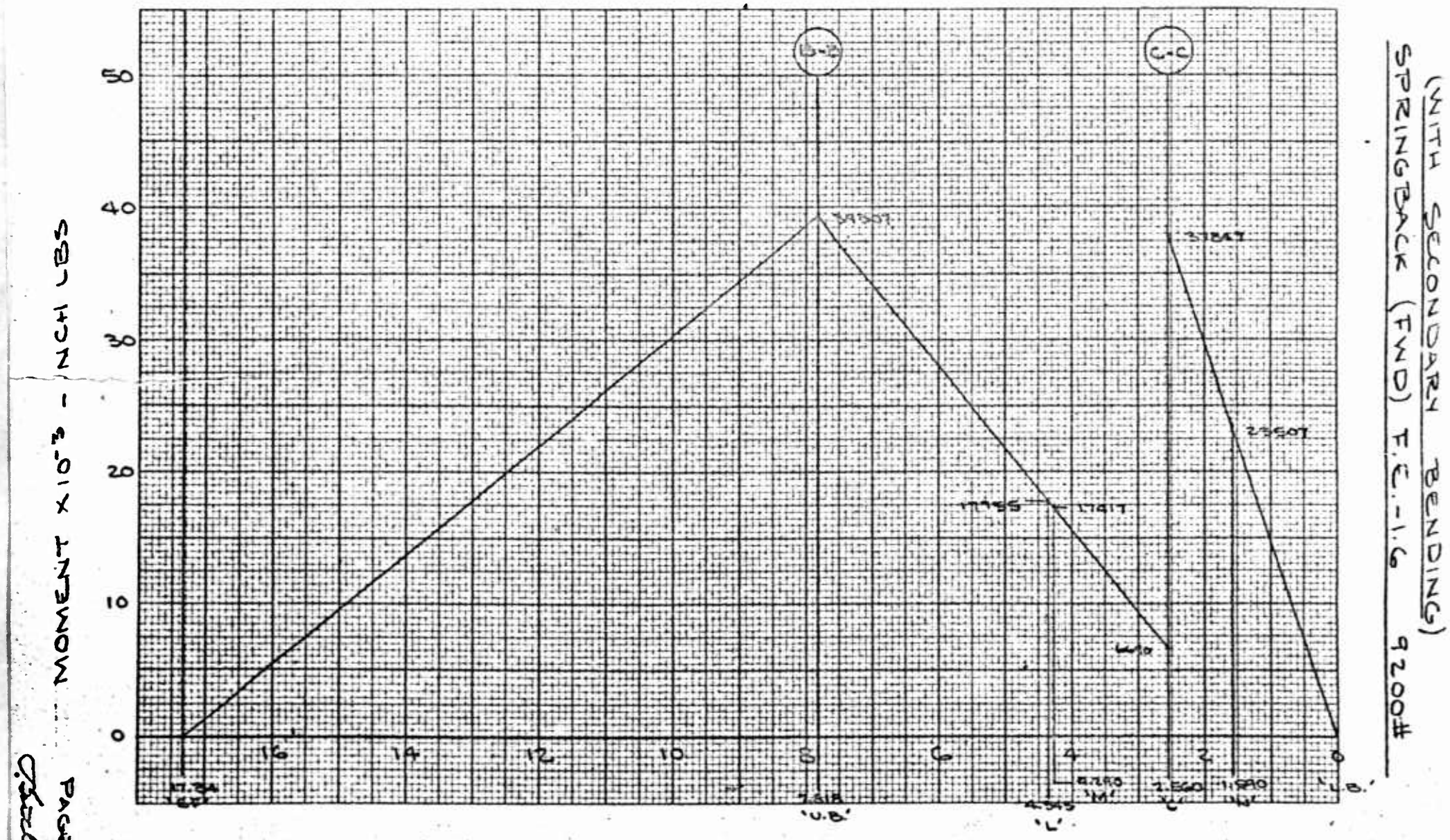

DISTANCE ALONG CYLINDER - INCHES

MOMENT X 10-3 - INCH LBS

CYLINDER BENDING MOMENT WITH SECONDARY BENDING

EXTENDED MATRIX

CONDITION - TURNING (FWD) F.E. - 5.3 12500#

		R_{DLB}	R_{SLB}	P_{DB}	R_{DUB}	R_{SUB}	R_{FJ}	R_{EK}	R_{VE}	R_{VF}	R_T	P_{DOOR}
	Σ	-105	4458	-221	-174	-3240	-6379	3141	2527	-5561	385	
~~M_{DN-}~~												
M_{SN-}	167	167										
M_{DN+}	7088		7088									
M_{SN+}	167	167										
~~M_{DC-}~~												
M_{SC-}	269	269										
M_{DC+}	12551		11412								1139	
M_{SC+}	-288	269		-557								
M_{DM}	22201		19125								3076	
M_{SM}	-372	450		-822								
M_{DL-}	22457		19361								3096	
M_{SL-}	-374	456		-830								
M_{DL+}	1323		19361				-14161	-6973			3096	
M_{SL+}	-374	456		-830								
M_{DUB}	8293		51347				-32775	-16138			5859	
M_{SUB}	-722	1209		-1931								
M_{DEF}	-4924		77315			-18873	-47887	-23579			8100	
M_{SEF}	~0~	1821		-2824	1014							
M_{DEF+}	~0~		77315			-18873			-20772	-45711	8100	

CALC [signature] CHECK APR APR

REVISED DATE

NOSE GEAR XV5A

CYLINDER ANALYSIS

H W LOUISMACHINE WORKS, INC
887 EAST SECOND ST POMONA, CALIFORNIA

15111

RYAN

PAGE 158

(WITH SECONDARY BENDING)

TURNING (FWD) F.E. - 5.3 12500#

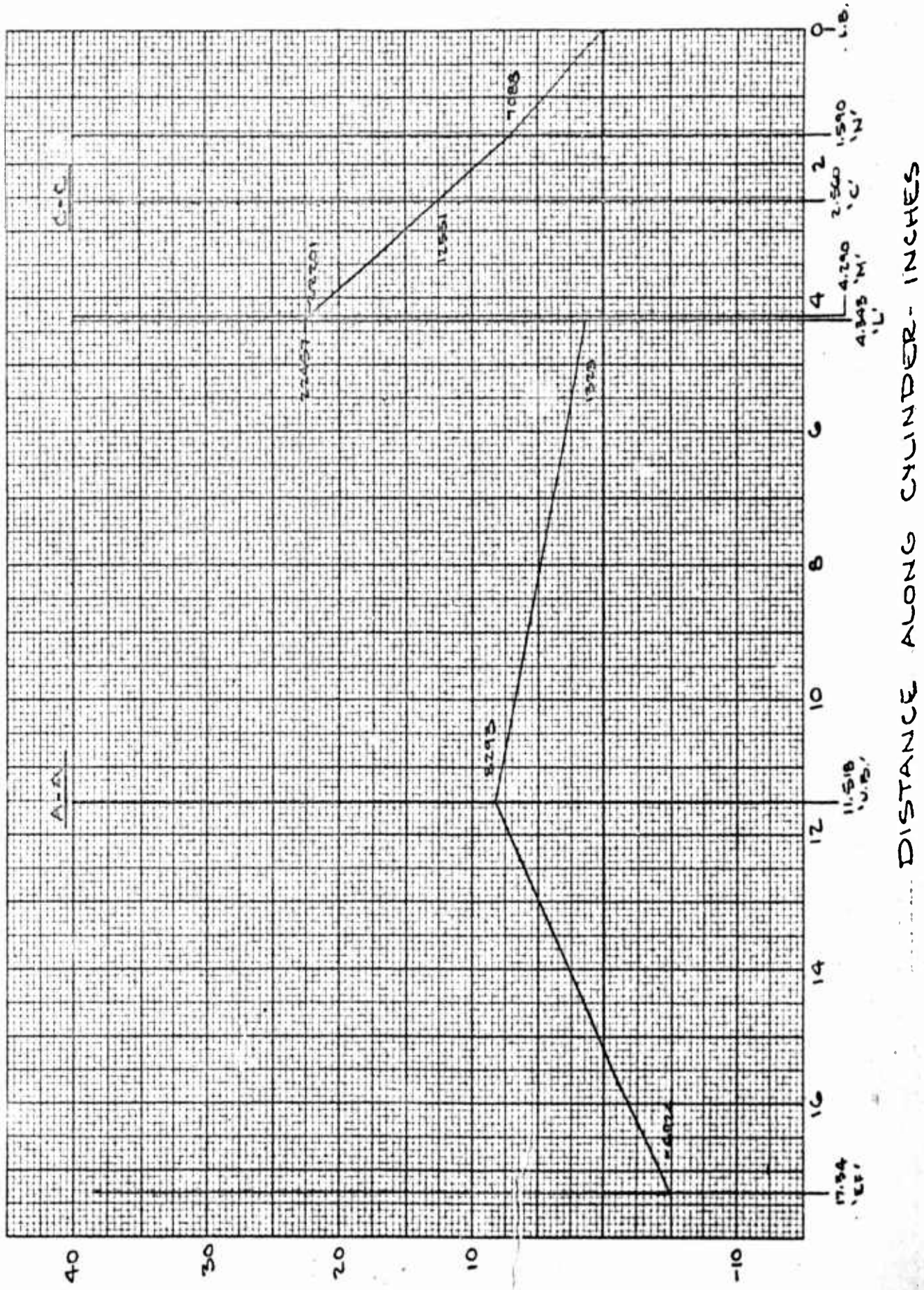

CYLINDER BENDING MOMENT

SUMMARY

CONDITION: SPINUP (FWD) F.E.-1.6 (9200#)

$M_{S_{N-}} = -23758$ IN.#

$M_{S_{N+}} = -23758$ IN.#

$M_{S_{C-}} = -38252$ IN.#

$M_{S_{C+}} = -8435$ IN.#

$M_{S_M} = -20074$ IN.#

$M_{S_{L-}} = -20040$ IN.#

$M_{S_{L+}} = -20040$ IN.#

$M_{SUB} = -44868$ IN.#

$M_{SEF} = 0$

(1) REF. P. 154

CALC			REVISED	DATE
CHECK				
APR				
APR				

NOSE GEAR XV5A

CYLINDER ANALYSIS

H. W. LOUD MACHINE WORKS, INC.
887 EAST SECOND ST., POMONA, CALIFORNIA

1511L

RYAN

CYLINDER BENDING MOMENT

SUMMARY

CONDITION: SPRINGBACK (FWD) F.E.-1.6 (9200#)

$M_{S_{N-}}$ = 23507 IN.#

$M_{S_{N+}}$ = 23507 IN.#

$M_{S_{C-}}$ = 37847 IN.#

$M_{S_{C+}}$ = 6690 IN.#

(1)

M_{S_M} = 17417 IN.#

$M_{S_{L-}}$ = 17755 IN.#

$M_{S_{L+}}$ = 17755 IN.#

$M_{S_{UB}}$ = 39307 IN.#

$M_{S_{EF}}$ = 0

(1) REF. P. 156

CALC			REVISED	DATE	NOSE GEAR XVSA CYLINDER ANALYSIS	1511L
CHK						RYAN
APP					H. W. LOUD MACHINE WORKS, INC. 687 EAST SECOND ST., POMONA, CALIFORNIA	PAGE 161

CYLINDER BENDING MOMENT

SUMMARY

CONDITION: TURNING (FWD) F.E. - 5.3 (12500#)

$M_{D_{N+}}$ = 7088 ⟷ 167 = 7090 IN.#

M_{D_C} = 12551 ⟷ 288 = 12555 IN.#

M_{D_M} = 22201 ⟷ 372 = 22210 IN.#

$M_{D_{L-}}$ = 22457 ⟷ 374 = 22460 IN.#

$M_{D_{L+}}$ = 1323 ⟷ 374 = 1375 IN.#

$M_{D_{UB}}$ = 8293 ⟷ 722 = 8325 IN.#

$M_{D_{EF-}}$ = -4924

$M_{D_{EF+}}$ = 0

[1] REF. P, 158

CALC			REVISED	DATE	NOSE GEAR XV5A	1511L
CHECK					CYLINDER ANALYSIS	RYAN
APR						
APR					H. W. LOUD MACHINE WORKS, INC. 887 EAST SECOND ST., POMONA, CALIFORNIA	PAGE 162

$P_{DBD} = -P_{BD} \sin 44° = -.6947\ P_{BD}$

$P_{VBD} = P_{BD} \cos 44° = .7201\ P_{BD}$

$R_{FJ} = 1.243\ R_{VF} - .333\ R_{SF}$

$R_{EK} = 1.243\ R_{VE}$

$R_{SFJ} = R_{FJ} \sin 24° = .4067\ R_{FJ}$

$R_{SEK} = R_{EK} \sin 24° = .4067\ R_{EK}$

CALC			REVISED	DATE	NOSE GEAR XV5A CYLINDER ANALYSIS	1511L
CHECK						RYAN
APR						
APR					H. W. LOUD MACHINE WORKS, INC. 807 EAST SECOND ST., POMONA, CALIFORNIA	PAGE 163

CYLINDER

FOR 7079 T6 ALUM. ALLOY

$$\frac{F_{ty}}{F_{tu}} = \frac{62}{71} = .87 = 87\%$$

$$\frac{F_{su}}{F_{tu}} = \frac{43}{71} = .605 = 60.5\%$$

$$F_{sy} = (87\% \times 60.5\%) F_{tu} = 53\% F_{tu}$$

F_{ty} = 62000 PSI

F_{sy} = 37630 PSI

F_{cy} = 65000 PSI

F_{tu} = 71000 PSI

F_{su} = 43000 PSI

F_c = 65000 PSI

CALC	Fischer		REVISED	DATE	NOSE GEAR XV5A	1511L
CHECK					CYLINDER ANALYSIS	RYAN
APR					H. W. LOUD MACHINE WORKS, INC. 887 EAST SECOND ST., POMONA, CALIFORNIA	PAGE 164
APR						

CYLINDER - 15111L104

SECTION A-A @ 11.518 IN. FROM L.B.

TURNING (FWD) F.E. - 5.3 (9200#) CRITICAL

M_{A-A} = 8325 IN.# (1)

$P_{TENSION} = P_{VBO}$ = .7201 X 221 = 159#

$P_{SHEAR} = R_{DLG} + R_{DBD} + R_{SLG} + R_{SBD} + R_{SCK}$

= -105 + 154 + 4458 - 2594 + 1279

= 49 + 3141 = 3142#

TORQUE = R_T + = 385 X 8.546 = 3290 IN.-# (2)

O.D. = 3.310 — 5.605 — 5.8921

I.D. = 3.007 — 7.078 — 3.9867

2t = .303 IN. — A = 1.527 IN.^{2} — I = 1.905 IN.^{4}

t = .151 IN

D/t = 21.49

F_{bu} = 91500 PSI (3)

FOR 7079 - T6 HAND FORGING:

F_{bu} = 91500 $\left(\frac{71}{74}\right)$ = 87790 PSI

V_o = 316 #

PISTON AREA = 4.897 IN.^{2}

PRESSURE DUE TO V_o = $\frac{319.3}{4.897}$ = 652 PSI

(2) REF. T.O. 1

(1) REF. P. 102

(3) REF. P. 314

CALC			REVISED	DATE	NOSE GEAR XYSA	1511L
CHECK					CYLINDER ANALYSIS	RYAN
APR					H. W. LOUD MACHINE WORKS, INC. 887 EAST SECOND ST., POMONA, CALIFORNIA	PAGE 165
APR						

CYLINDER - 1511L104

SECTION A-A CONT'D

$$f_{bu} = \frac{8325 \times 1.5 \times 1.655}{1.9054} = 10847 \text{ PSI}$$

$$R_{bu} = \frac{10847}{87790} = .124$$

$$f_{tu} = \frac{159 \times 1.5}{1.527} = 156 \text{ PSI} \qquad R_{tu} = \frac{156}{71000} = .002$$

$$f_{su(max)} = \frac{2 \times 3142 \times 1.5}{1.527} = 6171 \text{ PSI}$$

$$R_{su} = \frac{6171}{43000} = .144$$

$$f_{st} = \frac{3290 \times 1.5 \times 1.655}{2 \times 1.9054} = 2145 \text{ PSI}$$

$$R_{st} = \frac{2145}{43000} = .050$$

$$f_{ht} = \frac{652 \times 1.5 \times 3.156}{.308} = 10021 \text{ PSI}$$

$$R_{ht} = \frac{10021}{71000} = .141$$

$$R_{TOTAL} = \left[(R_b + R_t)^2 + (R_{ht})^2 + (R_s + R_{st})^2\right]^{1/2}$$

$$= \left[(.124 + .002)^2 + (.141)^2 + (.144 + .050)^2\right]^{1/2}$$

$$= .272$$

$$M.S. = \frac{1}{.272} - 1 = 2.68$$

CALC			REVISED	DATE	NOSE GEAR XV5A	1511L
CHECK					CYLINDER ANALYSIS	RYAN
APR					H. W. LOUD MACHINE WORKS, INC. 887 EAST SECOND ST., POMONA, CALIFORNIA	PAGE 166
APR						

CYLINDER - 1511L104

SECTION B-B 7.818 IN. FROM L.B.

SPINUP (FWD) F.E. -1.6 (9200#) CRITICAL

$M_{B-B} = -44868$ IN.# (1) $= M_{SUB}$

$P_{COMPR} = P_{V_{BD}} = .7201 \times 11832 = 8520\#$ (2)

$P_{SHEAR} = R_{D_{LB}} + P_{D_{BD}} = 14942 - .6947(11832)$ (3)

$= 6722\#$

TORQUE = 0

O.D. = 3.310	8.605	5.8921
I.D. = 3.002	7.078	3.9867
2t = .308 IN.	A = 1.527 IN.^{2}	I = 1.9054 IN.^{2}
t = .154 IN.		

D/t = 21.49 $F_{bu} = 91500$ PSI (4)

FOR 7079 T6 HAND FORGING:

$F_{bu} = 91500\left(\frac{71}{74}\right) = 87790$ PSI

$V_o = 5827$

PISTON AREA = 4.897 IN.^{2}

PRESSURE DUE TO $V_o = \frac{5827}{4.897} = 1190$ PSI

(2) REF. P. 144 (4) REF. P. 314

(1) REF. P. 155 & 160 (3) REF. P. 145

CALC	[signature]		REVISED	DATE	NOSE GEAR XV5A	1511L
CHECK					CYLINDER ANALYSIS	RYAN
APR					H. W. LOUD MACHINE WORKS, INC. 887 EAST SECOND ST., POMONA, CALIFORNIA	PAGE 167
APR						

CYLINDER - 1511L104

SECTION B-B CONT'D

$$f_{bu} = \frac{44868 \times 1.5 \times 1.655}{1.9054} = 58457 \text{ PSI}$$

$$R_{bu} = \frac{58457}{87790} = .666$$

$$f_c = \frac{8520 \times 1.5}{1.527} = 8367 \text{ PSI} \qquad R_c = \frac{8367}{65000} = .129$$

$$f_{su(max)} = \frac{2 \times 6722 \times 1.5}{1.527} = 13206 \text{ PSI}$$

$$R_{su(max)} = \frac{13206}{43000} = .307$$

$$f_{ht} = \frac{1190 \times 1.5 \times 3.156}{.308} = 18290 \text{ PSI}$$

$$R_{ht} = \frac{18290}{71000} = .258$$

$$R_{TOTAL} = \left[(R_b)^2 + (R_{ht})^2 + (R_s)^2\right]^{1/2} + R_c$$

$$= \left[(.666)^2 + (.258)^2 + (.307)^2\right]^{1/2} + .129$$

$$= .777 + .129 = .906$$

$$M.S. = \frac{1}{.906} - 1 = .104$$

CALC	[illegible]		REVISED	DATE
CHECK				
APR				
APR				

NOSE GEAR XV5A
CYLINDER ANALYSIS

H. W. LOUD MACHINE WORKS, INC.
887 EAST SECOND ST., POMONA, CALIFORNIA

1511L
RYAN
PAGE 168

CYLINDER - 1511L104

SECTION C-C 2.56 IN. FROM L.B.

SPINUP (FWD) F.E. - 1.6 (9200#) CRITICAL

$M_{C\cdot C} = -38252$ IN.# (1)

$P_{SHEAR} = R_{DLB} = 14942$ #

TORQUE = 0

$V_0 = 5827$ #

PISTON AREA = 4.897 IN.^{2}

PRESSURE = 1190 PSI

O.D. = 3.438	9.283	6.8579
I.D. = 3.002	7.078	3.9867
$2t$ = .436	A = 2.205 IN.^{2}	I = 2.8712 IN.^{4}
t = .218		

D/t = 15.77 $F_{bu} = 95000$ PSI (2)

FOR 7079 T6 HAND FORGING:

$F_{bu} = 95000 \left(\frac{71}{74}\right) = 91105$ PSI

(2) REF. P. 145

(1) REF. P. 155

CALC			REVISED	DATE	NOSE GEAR 'XV5A	1511L
CHECK					CYLINDER ANALYSIS	RYAN
APR					H. W. LOUD MACHINE WORKS, INC. 887 EAST SECOND ST., POMONA, CALIFORNIA	PAGE 169
APR						

CYLINDER - 1511L104

SECTION C-C CONTD

$$f_{bu} = \frac{38252 \times 1.5 \times 1.719}{2.8712} = 34350 \text{ PSI}$$

$$R_{bu} = \frac{34350}{91105} = .377$$

$$f_{su(MAX)} = \frac{2 \times 14942 \times 1.5}{2.205} = 20329 \text{ PSI}$$

$$R_{su} = \frac{20329}{43000} = .473$$

$$f_{ht} = \frac{1190 \times 1.5 \times 3.220}{.436} = 13183 \text{ PSI}$$

$$R_{ht} = \frac{13183}{71000} = .186$$

$$R_{TOTAL} = \left[(.377)^2 + (.473)^2 + (.186)^2\right]^{1/2} = .633$$

$$M.S. = \frac{1}{.633} - 1 = .580$$

CALC	Brodrick		REVISED	DATE
CHECK				
APR				
APR				

NOSE GEAR XYSA — 1511L

CYLINDER ANALYSIS — RYAN

H. W. LOUD MACHINE WORKS, INC.
887 EAST SECOND ST., POMONA, CALIFORNIA

CYLINDER - 1511L104

DRAG BRACE LUG

SPINUP (FWD) F.E. -1.6 (9200#) CRITICAL

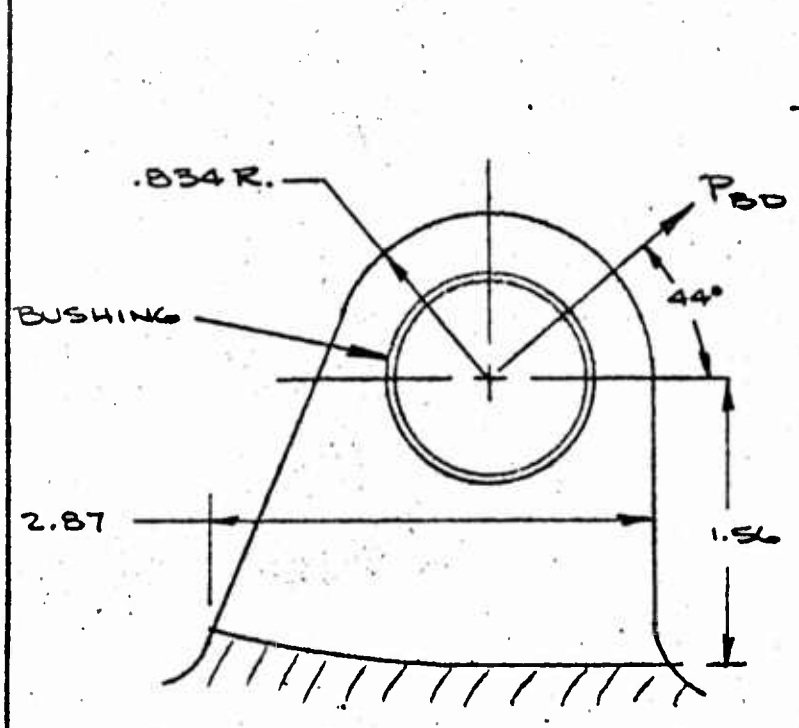

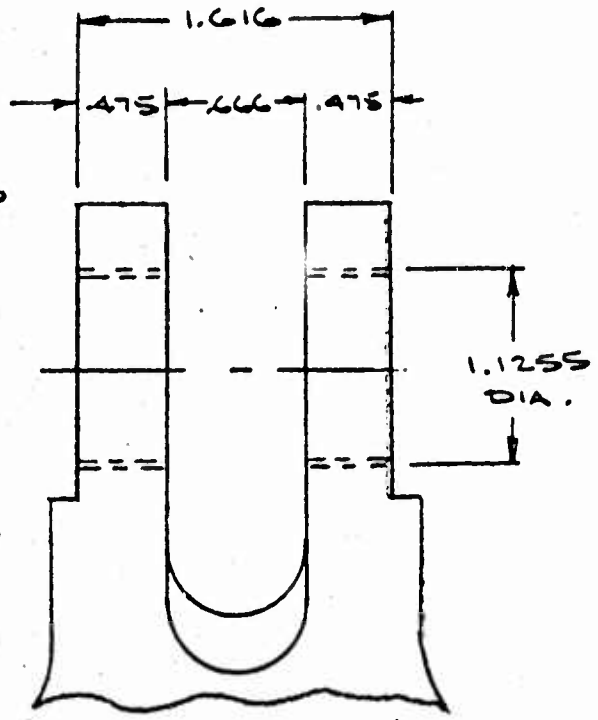

P_{BD} = 11832# [1]

LOAD/LUG = 11832/2 = 5916#

a = .834 [2]

D = 1.1255 + .06 = 1.187

W = 2 × .834 = 1.668

W/D = 1.405

t = .475

a/D = .703

K_{br} = .36

K_t = .99

$A_{br} = Dt$ = .564

$A_t = (W-D)t$ = .228

[2] SALVAGE BUSHING ALLOWANCE

[1] REF. P. 144

CALC	[illegible]		REVISED	DATE	NOSE GEAR XV5A	1511L
CHECK					CYLINDER ANALYSIS	RYAN
APR					H. W. LOUD MACHINE WORKS, INC. 887 EAST SECOND ST., POMONA, CALIFORNIA	PAGE 171
APR						

CYLINDER - 1511L104

DRAG BRACE LUG - CONTO

TENSION

$P'_u = K_t F_{tu} A_t = .99 \times 71000 \times .228 = 16026\#$

$P/LUG = 5916 \times 1.5 = 8874\#$

$$M.S. = \frac{16026}{\triangle 1.15 \times 8874} - 1 = \underline{.571}$$

$$\text{YIELD } M.S. = \frac{1.5 \times 16026}{\triangle 1.15 \times 8874} - 1 = \underline{1.35}$$

SHEAR BEARING

$P_{bru} = K_{br} F_{tux} A_{br} = .36 \times 69000 \times .564 = 14010\#$

$$M.S. = \frac{14010}{\triangle 1.15 \times 8874} - 1 = \underline{.37}$$

$$\text{YIELD } M.S. = \frac{1.5 \times 14010}{\triangle 1.15 \times 8874} - 1 = \underline{1.06}$$

LUG YIELD

$$\frac{P'_u(min)}{A_b F_{tu}} = \frac{14010}{.564 \times 71000} = .350 \qquad \therefore C = 1.1$$

$$P'_y = C \left(\frac{F_{ty}}{F_{tu}}\right) P'_u(min) = 1.1 \left(\frac{62000}{71000}\right) 14010 = 13450\#$$

$$\text{YIELD } M.S. = \frac{1.5 \times 13450}{\triangle 1.15 \times 8874} - 1 = \underline{.98}$$

△ FITTING FACTOR

CALC	Buchi		REVISED	DATE	NOSE GEAR XV5A	1511L
CHECK					CYLINDER ANALYSIS	RYAN
APR					H. W. LOUD MACHINE WORKS, INC. 887 EAST SECOND ST., POMONA, CALIFORNIA	PAGE 172
APR						

CYLINDER - 1511L104

DRAG BRACE LUG - CONT'D

$M = 1.56 \times 5916 = 9229$ IN.#

$M/LUG = 9229/2 = 4615$ IN.#

$AREA = 2.87 \times .475 = 1.363$ IN.^{2}

$K = 1.50$

$F_{bu} = \left(\frac{71}{74}\right) 105000 = 100695$ PSI [1]

$Z = \frac{.475 \times 2.87^2}{6} = .651$ IN.^{3}

$f_{bu} = \frac{4615 \times 1.5}{.651} = 10633$ PSI

$R_{bu} = \frac{10633}{100695} = \underline{.106}$

$f_{tux} = \frac{P_{BD} \times 1.5}{2A} = \frac{.6947 \times 11832 \times 1.5}{2 \times 1.363} = 4523$ PSI

$R_{tux} = \frac{4523}{67000} = \underline{.068}$

$M.S. = \frac{1}{.106 + .068} - 1 = \underline{4.75}$

[1] REF. P. 314

CALC	Rockit		REVISED	DATE	NOSE GEAR XV5A CYLINDER ANALYSIS	1511L
CHECK						RYAN
APR					H. W. LOUD MACHINE WORKS, INC. 887 EAST SECOND ST., POMONA, CALIFORNIA	PAGE 173
APR						

CYLINDER - 1511L104

DRAG BRACE LUG - CONT'D

BUSHING - BEARING ON DRAG BRACE LUG

LOAD $P = 5916\#$ (3)

$A_{br} = .475 \times 1.125 = .534 \text{ IN.}^2$

$F_{bru} = 80000 \text{ PSI}$ (1)

$f_{br} = \frac{5916 \times 1.5}{.534} = 16618 \text{ PSI}$

$M.S. = \frac{80000}{1.15 \times 16618} - 1 = \underline{\underline{3.19}}$ (2)

(2) FITTING FACTOR

(1) REF. 2 P. 306

(3) REF. P. 171

CALC			REVISED	DATE
CHECK				
APR				
APR				

NOSE GEAR XV5A — 1511L

CYLINDER ANALYSIS — RYAN

H. W. LOUD MACHINE WORKS, INC.
887 EAST SECOND ST., POMONA, CALIFORNIA

CYLINDER -1511L104

TRUNNION LUG ANALYSIS

SPINUP (FWD) F.E-1.6

(9200#) CRITICAL

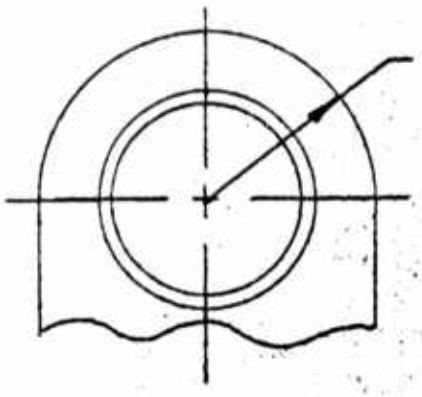

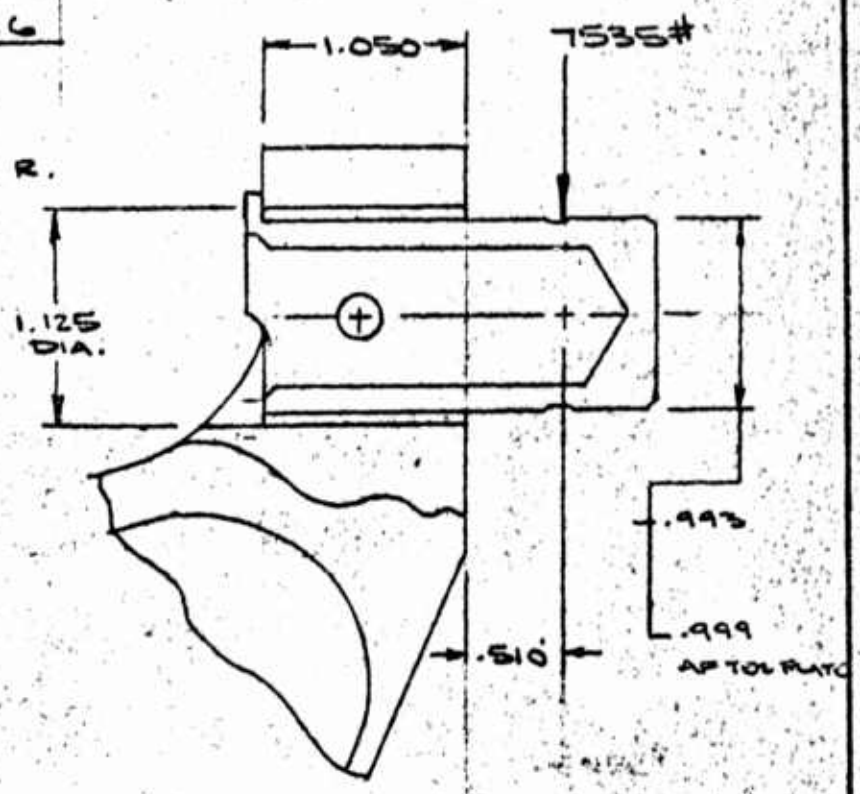

$R_{VE} = -7173$

$R_{VF} = -7173$ ▷1

$R_{DE} = 2306$

$R_{DF} = 2306$

SHEAR = 7173 + 2306 = 7535#

$M = .510 \times 7535 = 3843$ IN.#

$$\frac{M}{SL} = \frac{3843}{7535 \times 1.050} = .486$$

$K_1 = 6.9$

$K_2 = 5.1$

$$W_1 = \frac{K_1 S}{L} = \frac{6.9 \times 7535}{1.050}$$

$$W_2 = \frac{K_2 S}{L} = \frac{5.1 \times 7535}{1.050}$$

$W_1 = 49512$

$W_2 = 36597$

▷1 REF. P. 144

CALC	[signature]		REVISED	DATE	NOSE GEAR XV5A	1511L
CHECK					CYLINDER ANALYSIS	RYAN
APR					H. W. LOUD MACHINE WORKS, INC. 887 EAST SECOND ST., POMONA, CALIFORNIA	PAGE 175
APR						

CYLINDER

TRUNNION LUG ANALYSIS - CONTD

BEARING LOAD DISTRIBUTION

$$T_{Br} = W_1 - \frac{W_1 + W_2}{L} \cdot X$$

$$= 49512 - \left(\frac{49512 + 36597}{1.050}\right) X$$

$$= 49512 - 82010\,X$$

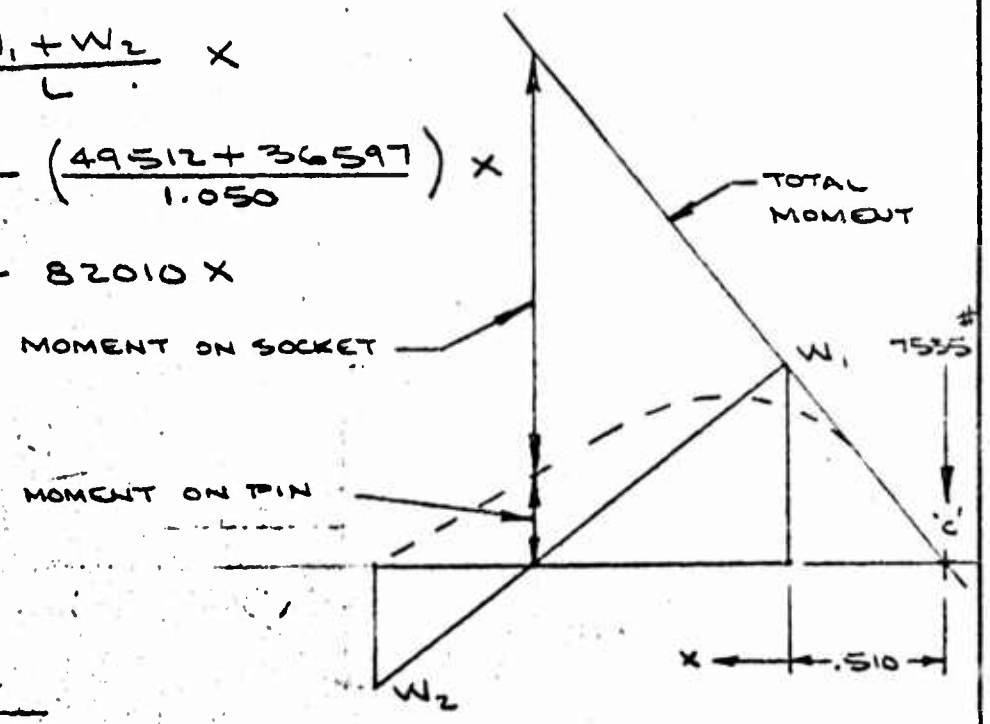

TOTAL MOMENT

$$M_T = (.510 + X)\,7535 = 3843 + 7535\,X$$

MOMENT ON SOCKET

$$M_S = \iint B_{Br}\,dx\,dx = \iint (49512 - 82010\,X)\,dx\,dx$$

$$= \frac{49512\,(X^2)}{2} - \frac{82010\,(X^3)}{6} = 24756\,(X^2) - 13668\,(X^3)$$

CALC	[illegible]		REVISED	DATE	NOSE GEAR XV5A	1511L
CHECK					CYLINDER ANALYSIS	RYAN
APR					H. W. LOUD MACHINE WORKS, INC. 887 EAST SECOND ST., POMONA, CALIFORNIA	PAGE 176
APR						

CYLINDER

TRUNNION LUG ANALYSIS – CONT'D

MOMENT ON PIN

$$M_P = M_T - M_S$$

$$= 3843 + 7535x - (24756x^2 - 13668x^3)$$

$$= 3843 + 7535x - 24756x^2 + 13668x^3$$

M_P = max. WHERE $\frac{dM_P}{dx} = 0$

$$\frac{dM_P}{dx} = 7535 - (24756x)2 + (13668x^2)3$$

$$= 7535 - 49512x + 41004x^2$$

$$x = \frac{+49512 \pm \sqrt{(49512)^2 - 4(41004)(7535)}}{2(41004)}$$

$$= \frac{49512 \pm \sqrt{24.514 \times 10^8 - 4(4.1004)10^4(.7535)10^4}}{2(4.1004)10^4}$$

$$= \frac{49512 \pm \sqrt{24.514 \times 10^{-8} - 12.3586 \times 10^8}}{2(4.1004)10^4}$$

$$= \frac{49512 \pm \sqrt{12.1554 \times 10^8}}{2(4.1004)10^4}$$

$$= \frac{49512 \pm 34865}{2(4.1004)10^4} = \frac{14647 \times 10^{-4}}{8.2008} = \frac{1.4647}{8.2008}$$

$$= \underline{\underline{.1786}}$$

CALC	[illegible]		REVISED	DATE	NOSE GEAR XV5A	1511L
CHECK					CYLINDER ANALYSIS	RYAN
APR					H. W. LOUD MACHINE WORKS, INC. 887 EAST SECOND ST., POMONA, CALIFORNIA	PAGE 177
APR						

CYLINDER -1511L104

TRUNNION LUG ANALYSIS - CONT'D

MAX. PIN BENDING FROM POINT 'C'

.179 + .510 = .689

SOCKET ANALYSIS - LAST 3/8 IN. OF SOCKET

$X = 1.050 - .38/2 = .860$

AVE. BEARING LOAD = $P_{bv} = 49512 - 82010\,(.86)$

$= -21017$ #/IN.

$a = .86$ $\quad a/D = .764$ $\quad K_{br} = .50$

$D = 1.125$ $\quad A_{br} = Dt = .428$ $\quad K_t = .98$

$t = .38$ $\quad A_t = (W-D)t = .226$

$W = 2 \times .86 = 1.72$

$W/D = 1.529$

$P_{br} = .38 \times 21017 \times 1.5 = 11980$ #

$P'_{br} = K_{br} A_{br} F_{tux} = .50 \times .428 \times 67000 = 14338$ #

$$M.S. = \frac{14338}{1.15 \times 11980} - 1 = .04$$

CALC			REVISED	DATE
CHECK				
APR				
APR				

NOSE GEAR XV5A

CYLINDER ANALYSIS

H. W LOUD MACHINE WORKS, INC.
887 EAST SECOND ST., POMONA, CALIFORNIA

FLYAN

CYLINDER

TRUNNION LUG ANALYSIS - CONT'D

$F_{tu} = 71000$ PSI

$P_{tu} = P_{br} = 11980$

$P'_{tu} = K_t A_t F_{tu} = .98 \times .226 \times 71000 = 15691$

$$M.S. = \frac{15691}{1.15 \times 11980} - 1 = \underline{.14}$$

MIDDLE OF SOCKET $= 1.050/2 = .525$

THEN: $X = .525$

AVE. BRG LOAD $= 49512 - 82010\,(.525)$

$= 6457$ #/IN.

ASSUME $a = .69$ $\quad a/D = .613$ $\quad K_{br} = .20$

$D = 1.125$ $\quad A_{br} = Dt = .281$

$t = .25$

$P_{br} = .25 \times 6457 \times 1.5 = 2422$#

$P'_{br} = .20 \times .281 \times 67000 = 3752$#

$$M.S. = \frac{3752}{1.15 \times 2422} - 1 = \underline{.35}$$

CALC	[signature]		REVISED	DATE	NOSE GEAR XV5A	1511L
CHECK					CYLINDER ANALYSIS	RYAN
APR					H. W. LOUD MACHINE WORKS, INC. 887 EAST SECOND ST., POMONA, CALIFORNIA	PAGE 179
APR						

CYLINDER - 1511 L104

TRUNNION LUG ANALYSIS - CONT'D

$M_S = 24756\,(.525)^2 - 13668\,(.525)^3 = 4851$ IN.#

O.D. = 1.375	1.485	.1755
I.D. = 1.125	.994	.0786
$2t$ = .250	A = .491 IN.^{2}	I = .0969 IN.^{4}
t = .125		

$D/t = 11.0$ $\quad F_{bu} = 98000\left(\frac{71}{74}\right) = 93980$ PSI [1]

$$f_{bu} = \frac{4851 \times 1.5 \times .687}{.097} = 51537 \text{ PSI}$$

$$R_{bu} = \frac{51537}{93980} = .548$$

$$f_{sbr} = \frac{2422}{.491} = 4933 \text{ PSI}$$

$$R_{sbr} = \frac{4933}{43000} = .115$$

$$M.S. = \frac{1}{.548 + .115} - 1 = .79$$

[1] REF. P. 314

CALC			REVISED	DATE
CHECK				
APR				
APR				

NOSE GEAR XV5A — 1511L

CYLINDER ANALYSIS — RYAN

R. W. LOUD MACHINE WORKS, INC.
937 EAST SECOND ST., POMONA, CALIFORNIA

PAGE 100

TRUNNION PIN - 1511 L108

SPINUP (FWD) 9200# CRITICAL

$M_{MAX} = 3843 + 7535(.179) - 24756(.179)^2 + 13668(.179)^3$

$= 3843 + 1349 - 792 + 78$

$= 4478$ IN. #

O.D. = .993	.774	.0477
I.D. = .713	.399	.0127
2t = .280	A = .375 IN.^{2}	I = .0350 IN.^{4}
t = .140		

D/t = 7.09

F_{tu} = 180 000 PSI F_{bu} = 262000 PSI [1]

$$f_{bu} = \frac{4478 \times 1.5 \times .4965}{.0350} = 95287 \text{ PSI}$$

$$M.S. = \frac{262000}{95287} - 1 = \underline{\underline{1.75}}$$

AT SHEAR FACE

M = .510 × 7535 [2] = 3843 IN.#

A = .375 IN.^{2} D/t = .993/.140 = 7.09

I = .0350 IN.^{4}

F_{bu} = 259000 PSI F_{su} = 109000 PSI

$$f_{bu} = \frac{3843 \times 1.5 \times .4965}{.0350} = 81775 \text{ PSI} \quad R_{bu} = \frac{81775}{259000} = .316$$

$$f_{su} = \frac{7535 \times 1.5}{.375} = 30140 \text{ PSI} \quad R_{su} = \frac{30140}{109000} = .277$$

[2] REF. P. 175

[1] REF. P. 316

$$M.S. = \frac{1}{.316 + .277} - 1 = \underline{1.38}$$

CALC	[signature]		REVISED	DATE	NOSE GEAR XV5A	1511L
CHECK					CYLINDER ANALYSIS	RYAN
APR					H. W. LOUD MACHINE WORKS, INC. 887 EAST SECOND ST., POMONA, CALIFORNIA	PAGE 181
APR						

CYLINDER - 1511L104

TRUNNION - LEFT HAND

SPINUP (FWD) F.E. - 1.6 (9200#) CRITICAL

R_{D_F} = 2306# ▷1

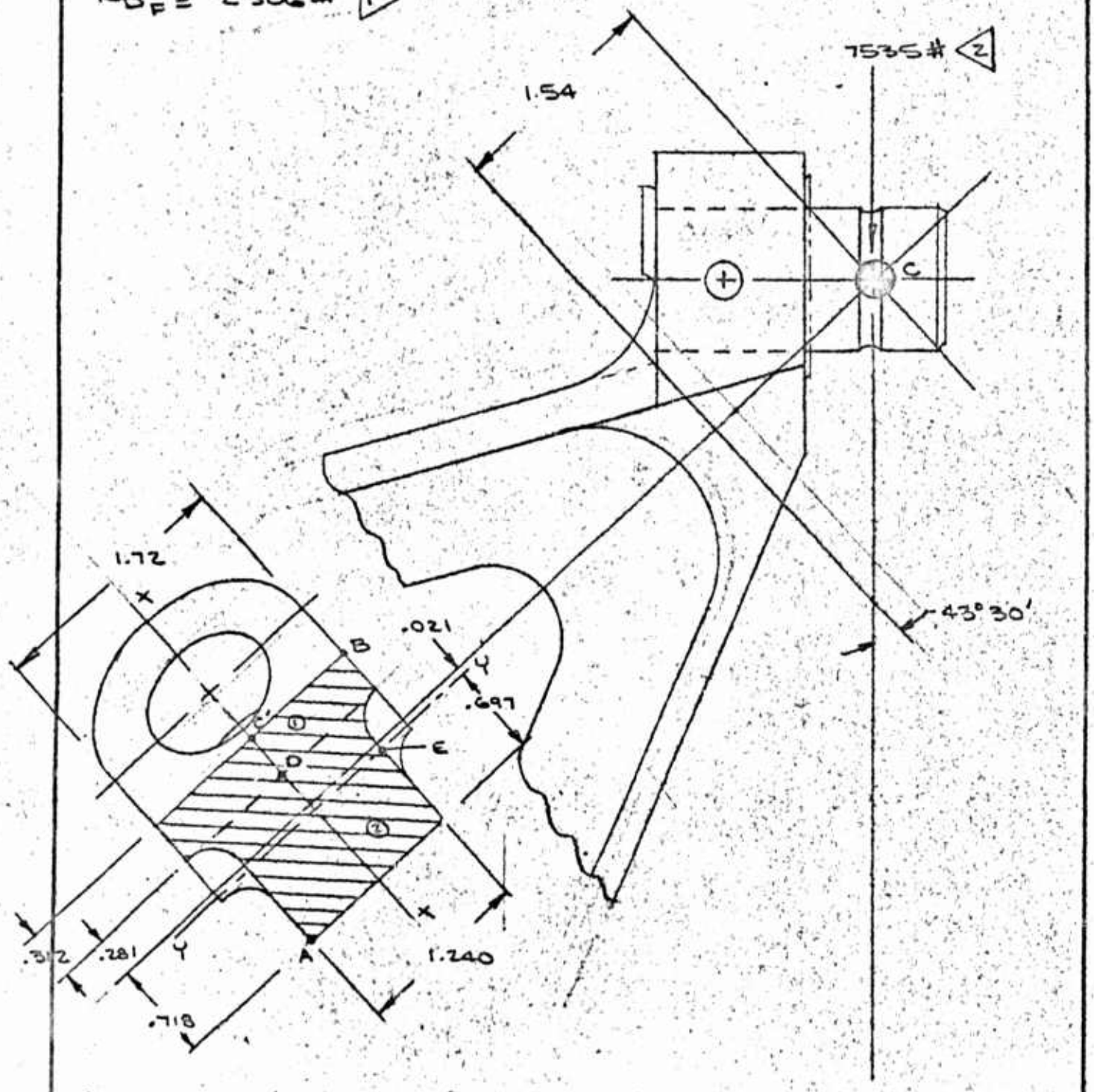

▷1 REF. P. 144

◁2 REF. P. 175

CALC	[signature]		REVISED	DATE	NOSE GEAR XV5A	1511L
CHECK					CYLINDER ANALYSIS	RYAN
APR					H. W. LOUD MACHINE WORKS, INC. 887 EAST SECOND ST., POMONA, CALIFORNIA	PAGE 182
APR						

CYLINDER - 1511L104.

TRUNNION - LEFT HAND CONT'D

SECTION TAKEN 1.54 IN. FROM 'C' AT 43° 30'

		A	X	Y	AX	AY	AX^2	AY^2	$I_{o\,x-x}$	$I_{o\,y-y}$
1	.312 X 1.72	.534	1.156	0	.617	0	.713	0	.1323	.0043
2	1.00 X 1.24	1.240	.50	0	.620	0	.310	0	.1621	.1040
	Σ	1.774			1.237		1.023		.2944	.1083

$$\bar{x} = \frac{\Sigma AX}{\Sigma A} = \frac{1.237}{1.774} = .697 \text{ IN.}$$

$I_{x-x} = .2944 \text{ IN.}^4$

$I_{y-y} = 1.023 + .2944 - 1.774(.697)^2 = .4554 \text{ IN.}^4$

$M_{y-y} = (7535 \cos 43° 30') 1.54 - (7535 \sin 43° 30') .021$

$= (7535 \times .7254) 1.54 - (7535 \times .6884) .021$

$= 8309 \text{ IN.\#}$

$M_{x-x} = 2306 \times 1.54 = 3551 \text{ IN.\#}$

COMPRESSION = $7535 \sin 43° 30' = 7535 \times .6884$

$= 5187 \#$

$SHEAR_x = 7535 \cos 43° 30' = 7535 \times .7254 = 5466 \#$

$SHEAR_y = 2306 \#$

TORQUE = $2306 \times .021 = 48 \text{ IN.\#}$

CALC	Turbiet		REVISED	DATE	NOSE GEAR XV5A	1511L
CHECK					CYLINDER ANALYSIS	RYAN
APR					H. W. LOUD MACHINE WORKS, INC. 837 EAST SECOND ST., POMONA, CALIFORNIA	PAGE 183
APR						

CYLINDER - 1511L104

TRUNNION - LEFT HAND CONT'D

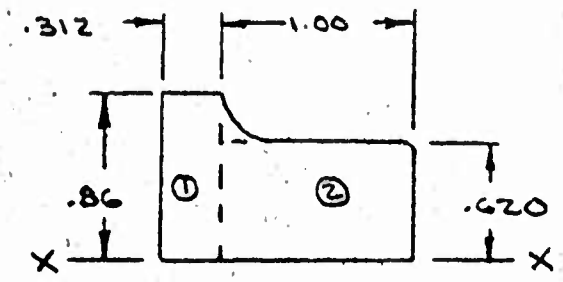

		A	Y	AY
1	.312X.86	.268	.43	.115
2	.620X1.00	.620	.310	.192
	Σ	.888		.307

$$\bar{Y} = \frac{\Sigma AY}{\Sigma A} = \frac{.307}{.888} = .346 \text{ IN.}$$

$$Q_{x-x} = A\bar{Y} = .307$$

$$C = .86$$

$$K_{x-x} = \frac{2 Q_{x-x} C}{I_{x-x}}$$

$$= \frac{2 \times .307 \times .86}{.2944} = 1.794$$

CALC	[signature]		REVISED	DATE	NOSE GEAR XV5A	1511L
CHECK					CYLINDER ANALYSIS	RYAN
APR						
APR					H. W. LOUD MACHINE WORKS, INC. 887 EAST SECOND ST., POMONA, CALIFORNIA	PAGE 184

CYLINDER-1511L104

TRUNNION - LEFT HAND CONTD

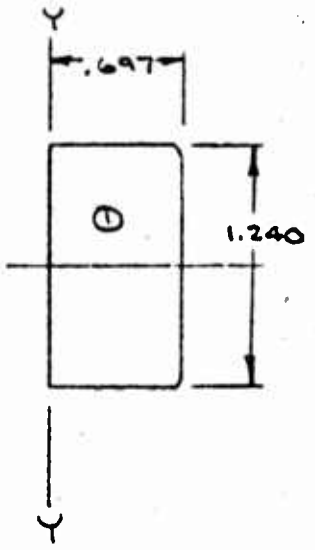

$$\bar{X} = \frac{\Sigma AX}{\Sigma A} = \frac{.302}{.864} = .350$$

$$Q_{Y-Y} = A\bar{X} = .302$$

$$C = .697$$

$$K_{Y-Y} = \frac{2 Q_{Y-Y} C}{I_{Y-Y}} = \frac{2 \times .302 \times .697}{.4554} = .924 \text{ USE } 1.0$$

CALC			REVISED	DATE	NOSE GEAR XV5A	1511L
CHECK					CYLINDER ANALYSIS	RYAN
APR						
APR					H. W. LOUD MACHINE WORKS, INC. 887 EAST SECOND ST., POMONA, CALIFORNIA	PAGE 185

CYLINDER - 1511L104

TRUNNION - LEFT HAND CONTD

SPINUP (FWD) F.E. -1.6 (9200#)

$F_{b_{x-x}} = \left(\frac{71}{74}\right) 123500 = 118437$ PSI (1) $\quad K_{x-x} = 1.8$

$F_{b_{y-y}} = \left(\frac{71}{74}\right) 74000 = 70966$ PSI (1) $\quad K_{y-y} = 1.0$

ASSUME DRAG LOAD (2306#) TAKEN BY LOWER LEG POINT 'A'

$f_{b_{y-y}} = \frac{8309 \times .349 \times 1.5}{.4554} = 9547$ PSI

$R_{b_{y-y}} = \frac{9560}{70966} = .135$

$F_c = 65000$ PSI (2)

$f_c = \frac{5187 \times 1.5}{1.774} = 4386$ PSI

$R_c = \frac{4386}{65000} = .067$

$M.S. = \frac{1}{.135 + .067} - 1 = 3.95$

(1) REF. P. 314 (2) REF. 2 P. 121

CALC	Schmidt		REVISED	DATE
CHECK				
APR				
APR				

NOSE GEAR XV5A — 1511L

CYLINDER ANALYSIS — RYAN

H. W. LOUD MACHINE WORKS, INC.
897 EAST SECOND ST., POMONA, CALIFORNIA

CYLINDER -1511L104

TRUNNION - LEFT HAND CONT'D

POINT 'B'

LOWER LEG TAKES DRAG LOAD (M_{x-x})

$$I_{x-x} = \frac{.312 \times 1.72^3}{12} = .132 \text{ IN.}^4$$

$$f_{b_{y-y}} = \frac{8309 \times .615 \times 1.5}{.454} = 16826 \text{ PSI}$$

$$R_{b_{y-y}} = \frac{16826}{70966} = .237$$

$$f_{b_{x-x}} = \frac{3551 \times .86 \times 1.5}{.132} = 34702 \text{ PSI}$$

$$R_{b_{x-x}} = \frac{34702}{118437} = .293$$

$$R_c = .067$$

BENDING, TENSION & COMPRESSION

$$M.S. = \frac{1}{.237 + .293 - .067} - 1 = 1.16$$

CALC	[illegible]		REVISED	DATE	NOSE GEAR XV5A	1511L
CHECK					CYLINDER ANALYSIS	RYAN
APR						
APR					H. W. LOUD MACHINE WORKS, INC. 887 EAST SECOND ST., POMONA, CALIFORNIA	PAGE 187

CYLINDER - 1511L104

TRUNNION - LEFT HAND CONT'D

POINT C'

$$I_{x-x} = \frac{.312 \times 1.72^3}{12} = .132 \text{ IN.}^4$$

$R_{by-y} = .237$

$R_{DF} = 2306\#$

$R_c = .067$

$$Q_{x-x} = A\bar{Y} = .86 \times .312 \times .43 = .115 \text{ IN.}^3$$

$$f_{sy} = \frac{R_{DF}\, Q_{x-x}}{I_{x-x}\, b} = \frac{2306 \times .115 \times 1.5}{.132 \times .312} = 9658 \text{ PSI}$$

$F_{su} = 43000$ PSI ▷1

$$R_{sy} = \frac{9658}{43000} = \underline{.225}$$

TENSILE BENDING, COMPRESSION & SHEAR

$$M.S. = \frac{1}{\left[(.237-.067)^2 + (.225)^2\right]^{1/2}} - 1 = \underline{2.53}$$

▷1 REF. 2 P. 121

CALC	[signature]		REVISED	DATE	NOSE GEAR XV5A	15
CHECK					CYLINDER ANALYSIS	RYAN
APR					H. W. LOUD MACHINE WORKS, INC. 887 EAST SECOND ST., POMONA, CALIFORNIA	PAGE 188
APR						

CYLINDER - 1511L104

TRUNNION - LEFT HAND CONT'D

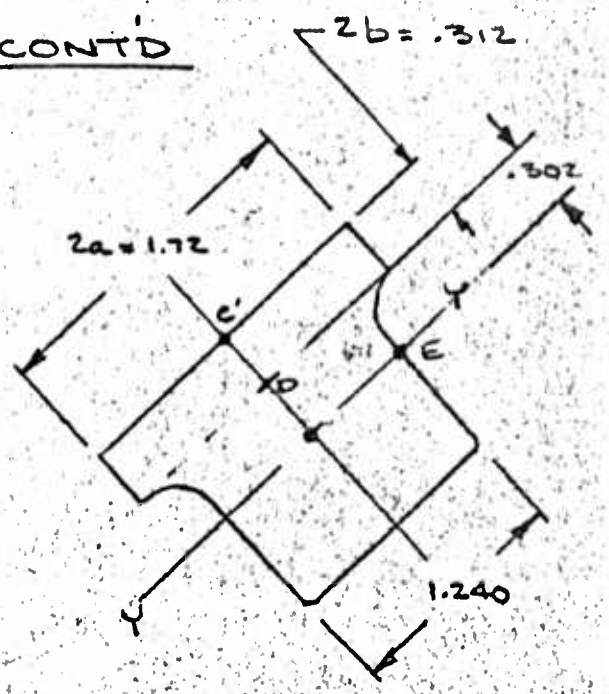

POINT D

$Q_{y} = .312 \times 1.72 \times .156 = .084 \text{ IN.}^3$

$I_{y-y} = .4554 \text{ IN.}^4$

$C_{y-y_D} = .302$

$F_{by-y} = 70966 \text{ PSI}$ (1)

$F_{st} = 43000 \text{ PSI} = F_s$ (2)

$$f_{sx} = \frac{5466 \times .86 \times 1.5}{.4554 \times 1.240} = 12486 \text{ PSI}$$ (1)

$$R_{sx} = \frac{12486}{43000} = .290$$

$$f_{by-y} = \frac{8309 \times .302 \times 1.5}{.4554} = 8267 \text{ PSI}$$ (1)

$$R_{by-y} = \frac{8267}{70966} = .116$$

$R_{sy} = .225$

$R_c = .067$

$T = 48 \text{ IN.\#}$

$$\text{MAX. } S = \frac{T(3a + 1.8b)}{8a^2b^2}$$ (3)

(2) REF. 2 P. 121

(1) REF. P. 183

(3) REF. 3 P. 168

CALC			REVISED	DATE	NOSE GEAR XV5A	1511L
CHECK					CYLINDER ANALYSIS	RYAN
APR					H. W. LOUD MACHINE WORKS, INC. 887 EAST SECOND ST., POMONA, CALIFORNIA	PAGE 189
APR						

CYLINDER - 1511 L104

TRUNNION - LEFT HAND CONT'D

POINT D CONT'D

$$f_{ST} = \frac{48 \times 1.5 \left[(3 \times .86) + (1.8 \times .156)\right]}{8 \times (.86)^2 \times (.156)^2}$$

$$= \frac{72\ (2.58 + .281)}{8(.74)(.024)} = \frac{206}{.142} = 1451 \text{ PSI}$$

$$R_{ST} = \frac{1451}{43000} = \underline{.034}$$

TENSILE BENDING, COMPRESSION BIAXIAL SHEAR & TORSION.

$$M.S. = \frac{1}{\left[(.116 - .067)^2 + (.290 + .225 + .034)^2\right]^{1/2}} - 1 = \underline{.81}$$

POINT E

$$Q_{4-4c} = \frac{1.72 \times .614^2 - .48 \times .302^2}{2} = .3025 \text{ IN.}^3$$

$$f_{sx} = \frac{5466 \times .3025 \times 1.5}{.4554 \times 1.24} = 4392 \text{ PSI}$$

$$R_{sx} = \frac{4392}{43000} = \underline{.102}$$

$$M.S. = \frac{1}{.102} - 1 = \underline{8.80}$$

VERY LARGE

(1) REF. P. 183

CALC			REVISED	DATE	NOSE GEAR XV5A	1511L
CHECK					CYLINDER ANALYSIS	RYAN
APR					H. W. LOUD MACHINE WORKS, INC. 887 EAST SECOND ST., POMONA, CALIFORNIA	PAGE 190
APR						

CYLINDER

BULKHEAD (PRESSURE DOME)

V_{TOL} (AFT) MAX. VERTICAL F.E. -1.6 (9200#) EMERG.

$V_o = 8448\#$

$A_{PISTON} = .7854(2.497)^2 = 4.897\ IN.^2$

PRESSURE DUE TO V_o:

$p = 8448/4.897 = 1725\ PSI$

$t = .375$

$a = 1.520$

$b = .500$

$$S_r = \frac{3W}{2\pi t^2}\left[\frac{1-2b^2}{a^2-b^2}\left(\log\frac{a}{b}\right)\right] \quad \text{(1)}$$

$$= \frac{3 \times 8448 \times 1.5}{2 \times 3.14 \times .141}\left[\frac{1-2(.25)}{2.06}\left(\log\frac{1.520}{.500}\right)\right]$$

$$= 42926\left[1-.243(\log 3.04)\right] = 42926 \cdot (1-.117)$$

$$= 37904\ PSI$$

$$R_s = \frac{37904}{43000} = .881$$

$$M.S. = \frac{1}{.881} - 1 = \underline{.135}$$

(1) REF. 3 P. 194 CASE 20

CALC	Exhibit		REVISED	DATE	NOSE GEAR XV5A CYLINDER ANALYSIS	1511L
CHECK						RYAN
APR					H. W. LOUD MACHINE WORKS, INC. 637 EAST SECOND ST., POMONA, CALIFORNIA	PAGE 191
APR						

SECTION 5

(PISTON)
INNER CYLINDER ANALYSIS

(1511L103)

F_{tu} = 220000 PSI

F_{ty} = 185000 PSI ▷1

F_{cy} = 215000 PSI

F_{bu} = F_b vs D/t OR F_b vs K

F_{by} = F_{by} vs D/t OR F_{by} vs K

F_{su} = 125000 PSI

▷1 REF. P. 317

CALC	[illegible]		REVISED	DATE	NOSE GEAR XV5A	1511L
CHECK					PISTON ANALYSIS	RYAN
APR					H. W. LOUD MACHINE WORKS, INC. 887 EAST SECOND ST., POMONA, CALIFORNIA	PAGE 192
APR						

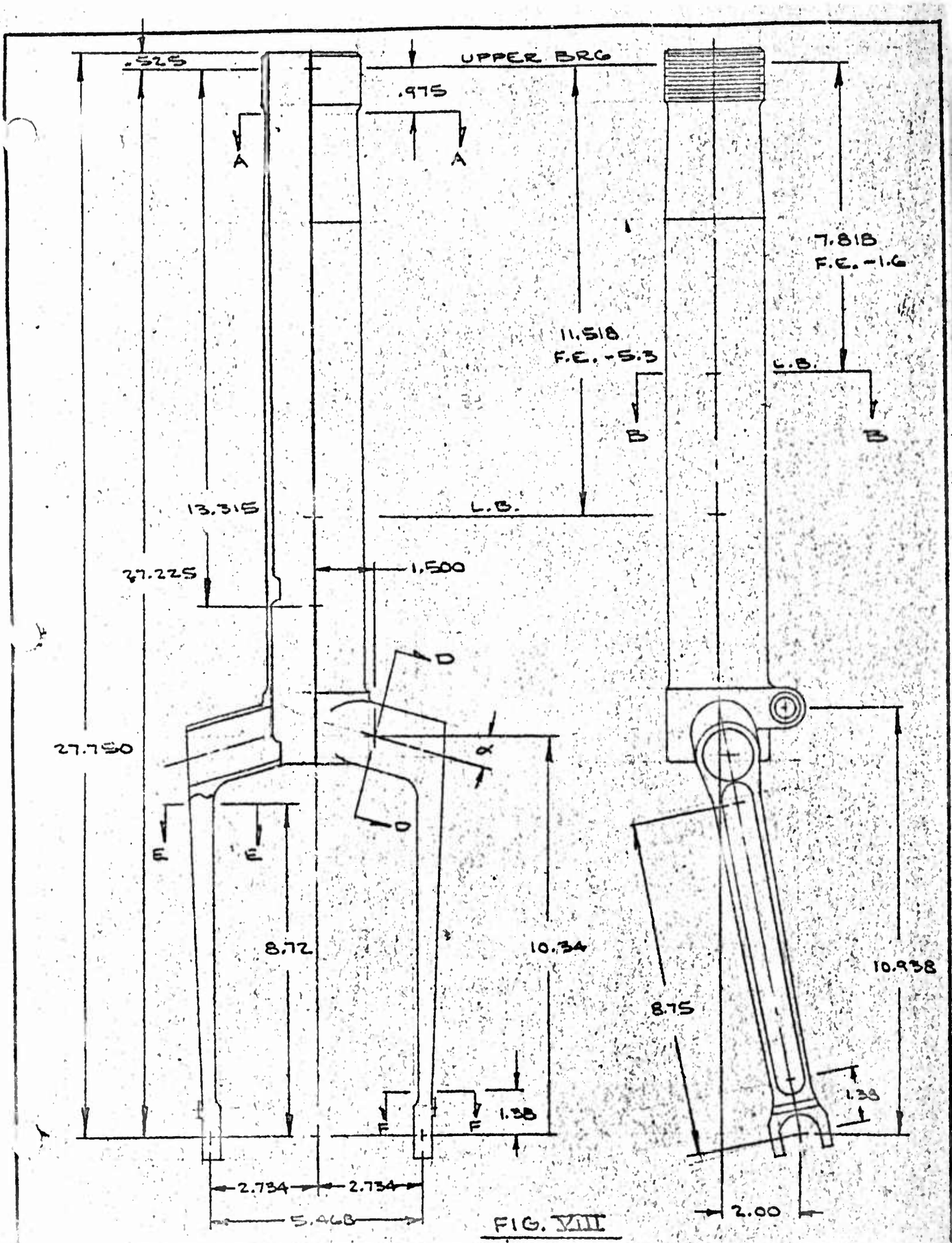
.525
UPPER BRG
.975
A
A
7.818
F.E. -1.6
11.518
F.E. -5.3
L.B.
B
B
L.B.
13.315
27.225
1.500
D
27.750
α
D
E
E
8.72
10.34
10.938
8.75
F
F
1.38
1.38
2.734
2.734
5.468
2.00

FIG. VIII

CLEARPRINT CHARTS

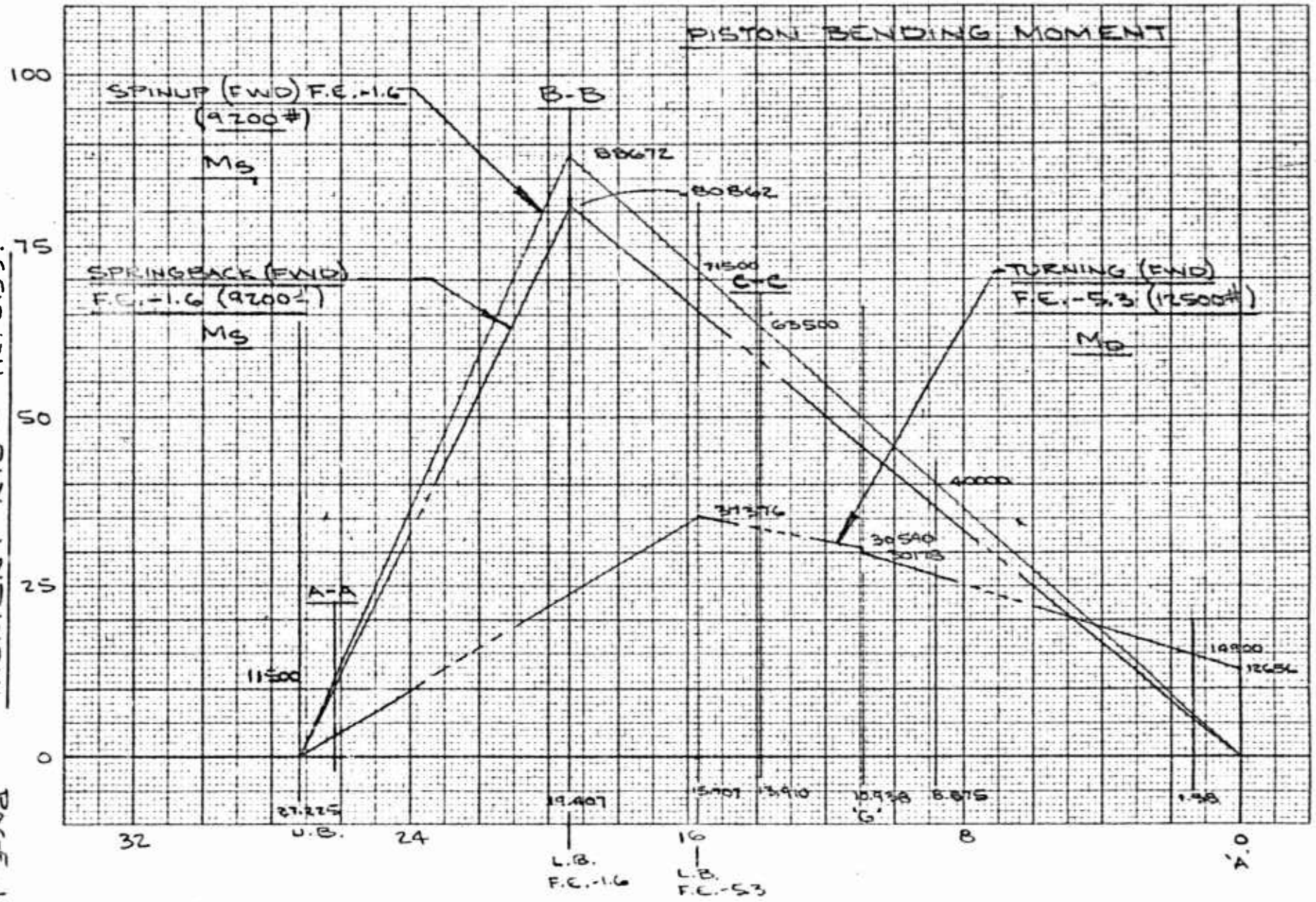

PAGE 194

CRITICAL CONDITIONS

SPINUP (FWD) F.E. -1.6 (9200#)

R_{DUB} = 11342 # REF. P. 145

R_{SUB} = 0

a = 7.818 IN. REF. P. 26

M_{LB} = 7.818 X 11342 = 88672 IN.#

SPRINGBACK (FWD) F.E. -1.6 9200#

R_{DUB} = -10343 # REF. P. 147

R_{SUB} = 0

a = 7.818 IN. REF. P. 26

M_{LB} = 7.818 X (-10343) = -80862 IN.#

TURNING (FWD) F.E. -5.3 (12500#)

R_{DUB} = 174 # REF. P. 149

R_{SUB} = 3240 # R_{UB} = 174 + 3240 = 3245#

a = 11.518 IN. REF. P. 26

M_{LB} = 11.518 X 3245 = 37376 IN.#

M_{S_0} = 0 R_T = -385# REF. P.

M_{DG-} = 1602 X (7.9 + 10.938) = 30178 IN.#

M_{DG+} = M_{DG-} + h R_T = 30178 + 1.070 X 385 = 30590 IN.#

M_{D_0} = 7.9 X 1602 = 12656 IN.#

CALC			REVISED	DATE	NOSE GEAR XV5A PISTON ANALYSIS	1511L
CHECK						RYAN
APR						
APR					H. W. LOUD MACHINE WORKS, INC. 887 EAST SECOND ST., POMONA, CALIFORNIA	PAGE 195

INNER CYLINDER

SECTION A-A (.975 IN. BELOW U.B.)

SPINUP (FWD) F.E. -1.6 (9200#) CRITICAL

M_{A-A} = 11500 IN. # (1)

O.D. =	2.375	4.430	1.5618
I.D. =	2.251	3.980	1.2603
2t =	.124	A = .450 IN.^{2}	I = .3015 IN.^{4}
t =	.062		

D/t = 38.31 F_{bu} = 243000 PSI (2)

$$f_{bu} = \frac{11500 \times 1.5 \times 1.1875}{.3015} = 67942 \text{ PSI}$$

$$R_{bu} = \frac{67942}{243000} = .280$$

$$f_{s_{MAX}} = \frac{2 \times 11342 \times 1.5}{.450} = 75613 \text{ PSI}$$

$$R_{s_{MAX}} = \frac{75613}{125000} = .605$$

O.D. PISTON (INNER CYL.) = 2.497 IN.

PISTON AREA = 4.897 IN.^{2}

PRESSURE DUE TO V_0 = $\frac{5827 \times 1.5}{4.897}$ = 1785 PSI

f_c = 1785 PSI

$$R_c = \frac{1785}{215000} = .008$$

$$M.S. = \frac{1}{.280 + .008 + .605} - 1 = .49$$

(2) REF. P. 317

(1) REF. P. 194

CALC	Brodrick		REVISED	DATE	NOSE GEAR XV5A	1511L
CHECK					PISTON ANALYSIS	RYAN
APR					H. W. LOUD MACHINE WORKS, INC. 887 EAST SECOND ST., POMONA, CALIFORNIA	PAGE 196
APR						

INNER CYLINDER

SECTION B-B (℄ L.B. FOR F.E.-1.6)

SPINUP (FWD) F.E.-1.6 (7.818 IN. FROM ℄ L.B.)

(9200#) CRITICAL

M_{B-B} = 88672 IN.# ▷1

O.D. = 2.491	4.873	1.8900
I.D. = 2.251	3.980	1.2603
2t = .240	A = .893 IN.^{2}	I = .6297 IN.^{4}
t = .120		

D/t = 20.76 F_{bu} = 275000 PSI ◁2

$$f_{bu} = \frac{88672 \times 1.5 \times 1.2455}{.6297} = 263090 \text{ PSI}$$

$$R_{bu} = \frac{263090}{275000} = \underline{.957}$$

PRESSURE DUE TO V_o = 1785 PSI ▷3

f_c = 1785 PSI $R_c = \frac{1785}{215000} = \underline{.008}$

$$f_{h_t} = \frac{1785\left(\frac{2.491+2.251}{2}\right)}{.240} = 17634 \text{ PSI}$$

$$R_{h_t} = \frac{17634}{220000} = .080$$

$$M.S. = \frac{1}{\left[(.008+.957)^2+(.080)^2\right]^{1/2}} - 1 = \underline{.03}$$

▷3 REF. P. 196

◁2 REF. P. 317

▷1 REF. P. 195

CALC	[illegible]		REVISED	DATE	NOSE GEAR XV5A	1511L
CHECK					PISTON ANALYSIS	RYAN
APR					H. W. LOUD MACHINE WORKS, INC. 887 EAST SECOND ST., POMONA, CALIFORNIA	PAGE 197
APR						

INNER CYLINDER

SECTION C-C (13.315 IN. BELOW Q U.B.)

SPINUP (FWD) F.E. -1.6 (9200#) CRITICAL

M_{C-C} = 63500 IN.LB. ▷1

O.D. =	2.491	4.873	1.8900
I.D. =	2.290	4.119	1.3499
2t =	.201	A = .754 IN.²	I = .5401 IN.⁴
t =	.1005		

D/t = 24.79 F_{bu} = 267000 PSI ◁2

$$f_{bu} = \frac{63500 \times 1.5 \times 1.2455}{.5401} = 219647 \text{ PSI}$$

$$R_{bu} = \frac{219647}{267000} = .823$$

$$f_c = \frac{5827 \times 1.5}{.754} = 11592 \text{ PSI} \qquad R_c = \frac{11592}{215000} = .054$$

$$f_s = \frac{2 \times 3600 \times 1.5}{.754} = 14324 \text{ PSI} \qquad R_s = \frac{14324}{125000} = .115$$

$$M.S. = \frac{1}{[(.823)^2 + (.115)^2]^{1/2} + .054} - 1 = .13$$

◁2 REF. P. 317

▷1 REF. P. 194

CALC	Bothit		REVISED	DATE	NOSE GEAR XV5A	1511C
CHECK					PISTON ANALYSIS	RYAN
APR					H. W. LOUD MACHINE WORKS, INC. 887 EAST SECOND ST., POMONA, CALIFORNIA	PAGE 198
APR						

INNER CYLINDER

SECTION D-D (10.34 IN. FROM ℄ AXLE)

SPINUP (FWD) F.E. -1.6 (9200#) CRITICAL

$V_o = 5827\#$ ▷1

$D_o = 3600\#$

$S_o = 0$

$\Delta D = 1.230$ ◁2

$$TORQUE_{ULT.} = \tfrac{1}{2}\left[10.34 \times 3600 \times 1.5 + (2.00+1.23) \times 5827 \times 1.5\right]$$

$$= 84068/2 = 42034 \text{ IN.\#} \quad \text{(ULTIMATE)}$$

$$TORQUE_{LIMIT} = \tfrac{1}{2}\left[10.34 \times 3600 + 3.23 \times 5827\right]$$

$$= 56045/2 = 28023 \text{ IN.\#} \quad \text{(LIMIT)}$$

$M_{V_{ULT}} = \tfrac{1}{2}(2.734 - 1.500)5400 = 3332$ IN.# (ULT.)

$M_{V_{LIMIT}} = \tfrac{1}{2}(2.734 - 1.500)3600 = 2221$ IN.# (LIMIT)

$M_{O_{ULT.}} = \tfrac{1}{2}(1.234)8741 = 5394$ IN.# (ULT.)

$M_{O_{LIMIT}} = \tfrac{1}{2}(1.234)5827 = 3596$ IN.# (LIMIT)

◁2 REF. P. 115

▷1 REF. P. 30

CALC			REVISED	DATE	NOSE GEAR XV5A	1511L
CHECK					PISTON ANALYSIS	RYAN
APR					H. W. LOUD MACHINE WORKS, INC. 887 EAST SECOND ST., POMONA, CALIFORNIA	PAGE 199
APR						

INNER CYLINDER

SECTION D-D CONT'D

SPINUP (FWD) 9200# CRITICAL

RESOLUTION OF MOMENTS (ULTIMATE)

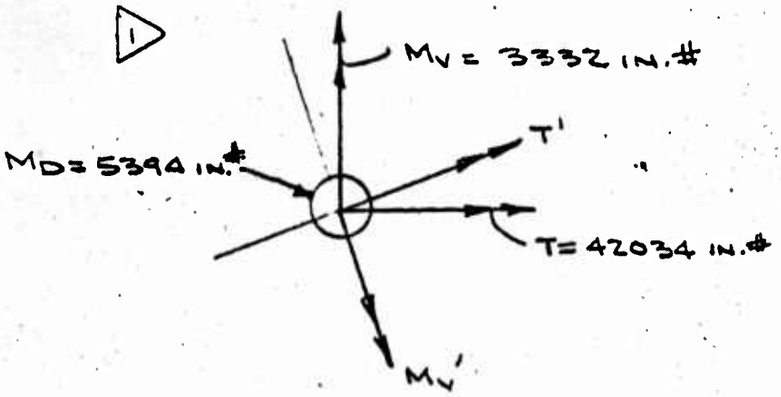

$\alpha = 15°$

$\sin\alpha = .2588$

$\cos\alpha = .9659$

$T' = T\cos\alpha + M_V \sin\alpha = 42034 \times .9659 + 3332 \times .2588$

$= 41463$ IN.#

$M_V' = M_V\cos\alpha - T\sin\alpha = 3332 \times .9659 - 42034 \times .2588$

$= -7660$ IN.#

$M_D' = 5394$ IN.#

RESOLUTION OF FORCES

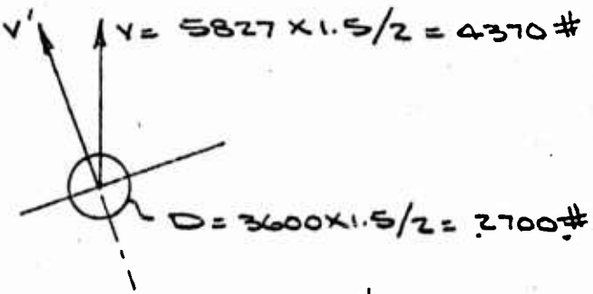

$V' = 4370 \times .9659 = 4221$#

$S' = 4370 \times .2588 = 1131$ #

$D' = 2700$#

1 REF. P. 199

CALC			REVISED	DATE	NOSE GEAR XV5A	1511L
CHECK					PISTON ANALYSIS	RYAN
APR					H. W. LOUD MACHINE WORKS, INC. 887 EAST SECOND ST., POMONA, CALIFORNIA	PAGE 200
APR						

INNER CYLINDER

SECTION D-D CONT'D

O.D. = 1.615 (.005)	2.048	.3339
I.D. = 1.385 (.005)	1.506	.1804
2t = .230	A_z = .542 IN.^{2}	I = .1535 IN.^{4}
t = .115		

D/t = 1.615/.115 = 14.0 L/D = 2.25/1.615 = 1.39

REF. MICHOMK'S P. 59 FIG. 2.4.3.2.

F_{st} = 133000 PSI ▷1 F_{bu} = 291000 PSI ◁2

$$f_{b_D} = \frac{5394 \times .8075}{.1535} = 28378 \text{ PSI}$$

$$R_{b_D} = \frac{28378}{291000} = .098$$

$$f_{b_V} = \frac{7660 \times .8075}{.1535} = 40299 \text{ PSI}$$

$$R_{b_V} = \frac{40299}{291000} = .138$$

$$f_{s_D} = \frac{2700}{.542} = 4982 \text{ PSI} \qquad R_{s_D} = \frac{4982}{125000} = .040$$

$$f_{s_V} = \frac{4221}{.542} = 7788 \text{ PSI} \qquad R_{s_V} = \frac{7788}{125000} = .062$$

$$f_{st} = \frac{41463 \times .807}{2 \times .1535} = 109048 \text{ PSI}$$

$$R_{st} = \frac{109048}{133000} = .820$$

◁2 REF. P. 317

▷1 REF. 2 P. 59 FIG. 2.4.3.2(h)

CALC	Boulet		REVISED	DATE	NOSE GEAR XV5A PISTON ANALYSIS	1511L
CHECK						RYAN
APR					H. W. LOUD MACHINE WORKS, INC. 887 EAST SECOND ST., POMONA, CALIFORNIA	PAGE 201
APR						

INNER CYLINDER

SECTION D-D CONT'D

$$f_c = \frac{1131}{.542} = 2087 \text{ PSI} \qquad R_c = \frac{2087}{215000} = \underline{.010}$$

$$R_{TOTAL} = (R_{bD} + R_{bV} + R_c) \longleftrightarrow (R_{sV} + R_{sD} + R_{st})$$

$$= (.098 + .138 + .010) \longleftrightarrow (.062 + .040 + .820)$$

$$= (.237) \longleftrightarrow (.922) = .952$$

$$M.S._{ULT} = \frac{1}{.952} - 1 = \underline{.05}$$

CALC			REVISED	DATE	NOSE GEAR XVSA	1511L
CHECK					PISTON ANALYSIS	RYAN
APR					H. W. LOUD MACHINE WORKS, INC. 887 EAST SECOND ST., POMONA, CALIFORNIA	PAGE 202
APR						

INNER CYLINDER

SECTION E-E (8.72 IN. FROM ℄ AXLE)

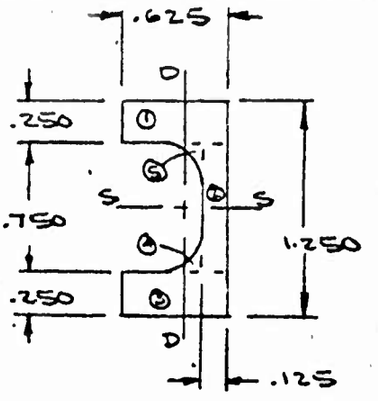

		A	D	S	AD	AS	AD^2	AS^2	$I_{o_{D-D}}$	$I_{o_{S-S}}$
1	.25x.625	.156	1.125	.312	.1755	.0487	.1974	.0152	.00508	.0008
2	.125x.75	.094	.625	.062	.0588	.0058	.0367	.00036	.00012	.0044
3	.25x.625	.156	.125	.312	.0195	.0487	.0024	.0152	.00508	.0008
4	.25R.	.013	.306	.181	.0040	.0024	.0012	.0004		
5	.25R	.013	.944	.181	.0122	.0024	.0116	.0004		
	Σ	.432			.270	.1080	.2493	.0316	.0103	.0060

$$\bar{S} = \frac{\Sigma AS}{\Sigma A} = \frac{.1080}{.432} = .250$$

$$\bar{D} = \frac{\Sigma AD}{\Sigma A} = \frac{.270}{.432} = .625$$

$$I_{S-S} = .0060 + .2493 = .2553 \text{ IN.}^4$$

$$I_{D-D} = .0103 + .0316 - .250\overset{.677}{(.1080)} = .0149 \text{ IN.}^4$$

$$Q_{S-S} = .250 \times .625 \times .500 + .125 \times .375 \times .188 = .0869$$

$$Q_{D-D} = 2 \times .371 \times .250 \times .186 = .0345$$

$$K_{S-S} = \frac{2 \times .0869 \times .625}{.2553} = .425 \quad \text{USE } K_{S-S} = 1.0$$

$$K_{D-D} = \frac{2 \times .0345 \times .371}{.0149} = 1.72 \quad \text{USE } K_{D-D} = 1.5$$

CALC	[illegible]		REVISED	DATE	NOSE GEAR XV5A	1511L
CHECK					PISTON ANALYSIS	RYAN
APR					H. W. LOUD MACHINE WORKS, INC. 887 EAST SECOND ST., POMONA, CALIFORNIA	PAGE 203
APR						

INNER CYLINDER

SECTION E-E CONT'D

TURNING (FWD) F.E.-5.3 (12500#) CRITICAL

50-50 DISTRIBUTION OF S_O

$V_o = 3193\#$ ▷1 $\qquad S_o = 1602 \times .50 = 801\#$

$M_D = 801 \times 8.72 = 6985$ IN.#

$\tan\theta = 2.00/10.812 = .18497$ REF. DWG 1511L103

$\theta = 10°29'$

$\therefore \sin\theta = .18195 \qquad \cos\theta = .9833$

$$V'_{AXIAL} = V\cos\theta = \left(\frac{M_{DD}}{5.468} + \frac{V_o}{2}\right)\cos\theta = \left(\frac{12656}{5.468} + \frac{3193}{2}\right).9833$$

$$= (2315 + 1597).9833 = 3847\ \#$$

$$V'_{TRANS.} = V\sin\theta = (2315 + 1597).1820 = 712\#$$

$F_{b_{D-D}} = 32.6000$ PSI ◁2 $\qquad F_{b_{S-S}} = 220000$ PSI

$$f_{b_{D-D}} = \frac{6985 \times .371 \times 1.5}{.0149} = 260883 \text{ PSI}$$

$$R_{b_{D-D}} = \frac{260883}{326000} = \underline{.800}$$

$$f_{b_{S-S}} = \frac{712 \times 8.72 \times .625 \times 1.5}{.2553} = 22797 \text{ PSI}$$

$$R_{b_{S-S}} = \frac{22797}{220000} = \underline{.104}$$

$$f_c = \frac{3847 \times 1.5}{.432} = 13357 \text{ PSI} \qquad R_c = \frac{13357}{215000} = \underline{.062}$$

◁2 REF. P. 317

▷1 REF. P. 31

CALC			REVISED	DATE	NOSE GEAR XV5A	1511L
CHECK					PISTON ANALYSIS	RYAN
APR					H. W. LOUD MACHINE WORKS, INC. 887 EAST SECOND ST., POMONA, CALIFORNIA	PAGE 204
APR						

INNER CYLINDER

SECTION E-E CONT'D

TURNING (FWD) 12500# - CONT'D

$$f_{S_S} = \frac{801 \times 1.5}{.432} = 2781 \text{ PSI} \qquad R_{S_S} = \frac{2781}{125000} = \underline{.022}$$

$$f_{S_D} = \frac{712 \times 1.5}{.432} = 2472 \text{ PSI} \qquad R_{S_D} = \frac{2472}{125000} = \underline{.020}$$

$$R_{TOTAL} = R_C + \left[(R_{b_{D-D}} + R_{b_{S-S}})^2 + (R_{S_S} + R_{S_D})^2\right]^{1/2}$$

$$= .062 + \left[(.800 + .104)^2 + (.022 + .020)^2\right]^{1/2}$$

$$= .062 + \left[.817 + .002\right]^{1/2} = .062 + .905 =$$

$$M.S. = \frac{1}{.967} - 1 = \underline{\underline{.034}}$$

CALC	[signature]		REVISED	DATE	NOSE GEAR XV5A	1511L
CHECK					CYLINDER ANALYSIS	RYAN
APR					H. W. LOUD MACHINE WORKS, INC. 887 EAST SECOND ST., POMONA, CALIFORNIA	PAGE 205
APR						

INNER CYLINDER

SECTION E-E CONT'D

SPINUP (FWD) F.E. -1.6 (9200#) CRITICAL

$\Delta D = 1.23$ [2]

$\tan\theta = \frac{(1.23 - .44) + 2.00}{10.812}$

$= \frac{2.790}{10.812} = .236$

$V = 5827/2 = 2914\ \#$

$D = 3600/2 = 1800\ \#$ [1]

$\sin\theta = .2298$

$\cos\theta = .9732$

$F_{bs} = 220000$ PSI

$P_{AXIAL} = V\cos\theta - D\sin\theta = 2914 \times .9732 - 1800 \times .2298$

$= 2422\ \#$

$P_{TRANSV.} = V\sin\theta + D\cos\theta = 2914 \times .2298 + 1800 \times .9732$

$= 2421\ \#$

$M_S = 8.72 \times 2421 = 21110$ IN.#

$f_{b_{S-S}} = \frac{21110 \times .625 \times 1.5}{.2553} = 77612$ PSI

$R_{b_{S-S}} = \frac{77612}{220000} = .353$

$f_c = \frac{2422 \times 1.5}{.432} = 8409$ PSI $\quad R_c = \frac{8409}{215000} = .039$

$f_{S_J} = \frac{2421 \times 1.5}{.432} = 8407$ PSI $\quad R_{S_J} = \frac{8407}{125000} = .067$

$R_{TOTAL} = .039 + (.353 + .067) = .398$

$M.S. = \frac{1}{.398} - 1 = 1.51$ +UGE

[2] REF. P. 115

[1] REF. P. 30

CALC	[illegible]		REVISED	DATE	NOSE GEAR XV5A	1511L
CHECK					PISTON ANALYSIS	RYAN
APR					H. W. LOUD MACHINE WORKS, INC 887 EAST SECOND ST., POMONA, CALIFORNIA	PAGE 206
APR						

INNER CYLINDER

SECTION F-F (1.38 IN. FROM ℄ AXLE)

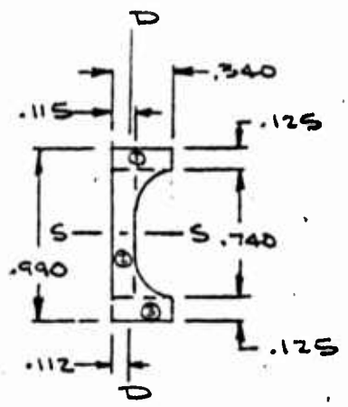

NEGLECTING FILLETS:

		A	D	S	AD	AS	AD^2	AS^2	$I_{o_{D-D}}$	$I_{o_{S-S}}$
1	.125X.340	.0425	.928	.170	.039	.007	.0366	.0012	.00039	.000055
2	.115X.740	.0850	.495	.058	.042	.005	.0208	.0003	.00009	.00389
3	.125X.340	.0425	.063	.170	.0027	.007	.00017	.0012	.00039	.000055
	Σ	.170			.0837	.0190	.0576	.0027	.00087	.00400

$$\bar{S} = \frac{\Sigma AS}{\Sigma A} = \frac{.0190}{.170} = .112$$

$$\bar{D} = \frac{\Sigma AD}{\Sigma A} = \frac{.0837}{.170} = .492 \sim .495$$

$I_{S-S} = .0040 + .0576 = .0616$ IN.^{4}

$I_{D-D} = .00087 + .0027 - .112(.0190) = .0016$ IN.^{4}

$Q_{S-S} = .125 \times .340 \times .307 + .115 \times .370 \times .185 = .0209$

$Q_{D-D} = 2 \times .125 \times .228 \times .114 = .0065$

$K_{S-S} = \frac{2 \times .0209 \times .495}{.0616} = .336$ USE $K_{S-S} = 1.0$

$K_{D-D} = \frac{2 \times .0065 \times .228}{.0016} = 1.85$ USE $K_{D-D} = 1.50$

CALC			REVISED	DATE	NOSE GEAR XV5A — PISTON ANALYSIS
CHECK					
APR					
APR					

H. W. LOUD MACHINE WORKS, INC.
887 EAST SECOND ST., POMONA, CALIFORNIA

1511L

RYAN

PAGE 207

INNER CYLINDER

SECTION F-F CONT'D

SPINUP (FWD) F.E-1.6 (9200#)

$V = 5827/2 = 2914\#$

$D = 3600/2 = 1800\#$

$\Delta D = 1.23$ ▷1

$\tan\theta = \frac{(1.23 - 1.06) + 2.00}{10.812}$

$= .2307$

$\sin\theta = .1968$

$\cos\theta = .9804$

$P_{AXIAL} = V\cos\theta - D\sin\theta$

$= 2914 \times .9804 - 1800 \times .1968$

$= 2503\#$

$P_{TRANSV.} = V\sin\theta + D\cos\theta = 2914 \times .1968 + 1800 \times .9804$

$= 2338\#$

$M_S = 1.38 \times 2338 = 3226$ IN.#

$F_{b_{S-S}} = 220000$ PSI

$f_{b_{S-S}} = \frac{3226 \times .495 \times 1.5}{.0616} = 38886$ PSI

$R_{b_{S-S}} = \frac{38886}{220000} = .177$

$f_c = \frac{2503 \times 1.5}{.170} = 22086$ PSI

$R_c = \frac{22086}{215000} = .103$

$f_s = \frac{2338 \times 1.5}{.170} = 20630$ PSI

$R_s = \frac{20630}{125000} = .165$

$M.S. = \frac{1}{.103 + .177 + .165} - 1 = \frac{1.90}{+ \text{LGE}}$

▷1 REF. P. 115

CALC	Ritchie		REVISED	DATE	NOSE GEAR XV5A PISTON ANALYSIS	1511L
CHECK						RYAN
APR.					H. W. LOUD MACHINE WORKS, INC. 667 EAST SECOND ST., POMONA, CALIFORNIA	PAGE 208
APR.						

INNER CYLINDER

SECTION F-F CONT'D

TURNING (FWD) F.E. - 5.3 (12500#) CRITICAL

50-50 DISTRIBUTION

$\sin\phi = .1820$
$\cos\phi = .9833$

$M_{D_o} = 12.656$ IN.# ▷1

$V_o = 3193\#$

$S_o = 1602 \times .50 = 801\#$

$$V'_{AXIAL} = V\cos\phi = \left(\frac{12656}{5.468} + \frac{3193}{2}\right).9833$$

$$= (2315 + 1597).9833 = 3847\#$$

$$V'_{TRANSV.} = V\sin\phi = (2315+1597).1820 = 712\#$$

$M_D = 1.38 \times 801 = 1105$ IN.#

$F_{b_{D-D}} = 326000$ PSI ◁2

$$f_{b_{D-D}} = \frac{1105 \times .228 \times 1.5}{.0016} = 236194 \text{ PSI}$$

$$R_{b_{D-D}} = \frac{236194}{326000} = .725$$

$$f_{b_{S-S}} = \frac{712 \times .495 \times 1.5}{.0616} = 8582 \text{ PSI}$$

$$R_{b_{S-S}} = \frac{8582}{220000} = .039$$

$$f_c = \frac{3847 \times 1.5}{.170} = 33944 \text{ PSI} \qquad R_c = \frac{33944}{215000} = .158$$

▷1 REF. P. 195 ◁2 REF. P. 204

CALC			REVISED	DATE
CHECK				
APR				
APR				

NOSE GEAR XV5A
PISTON ANALYSIS

H. W. LOUD MACHINE WORKS, INC.
607 EAST SECOND ST., POMONA, CALIFORNIA

1511L
RYAN
PAGE 209

INNER CYLINDER

SECTION F-F CONT'D

TURNING (FWD) 12500# - CONT'D

$$f_{s_S} = \frac{801 \times 1.5}{.170} = 7068 \text{ PSI} \qquad R_{s_S} = \frac{7068}{125000} = .057$$

$$f_{s_D} = \frac{712 \times 1.5}{.170} = 6283 \text{ PSI} \qquad R_{s_D} = \frac{6283}{125000} = .050$$

$$R_{TOTAL} = .158 + \left[(.725 + .039)^2 + (.057 + .050)^2\right]^{1/2}$$

$$= .158 + \left[.584 + .011\right]^{1/2} = .158 + .772 = .930$$

$$M.S. = \frac{1}{.930} - 1 = .075$$

CALC			REVISED	DATE	NOSE GEAR XV5A	1511L
CHECK					PISTON ANALYSIS	RYAN
APR						
APR					H. W. LOUD MACHINE WORKS, INC. 507 EAST SECOND ST., POMONA, CALIFORNIA	PAGE 210

SECTION 6

1. TORQUE LINK - UPPER (1511L135)

MATL: 2014 T6 ALUM. ALLOY PER QQ-A-266

F_{tu} = 64000 PSI

F_{cy} = 59000 PSI ▷1

F_{su} = 39000 PSI

F_{bu} = F_b vs D/t OR F_b vs K

2. PIN (TORQUE LINK) (1511L134)

MATL: 4140 STEEL

F_{tu} = 180000/200000 PSI

F_{cy} = 179000 PSI ◁2

F_{su} = 109000 PSI

F_{bu} = F_b vs D/t OR F_b vs K

3. TORQUE LINK - LOWER (1511L136)

MATL: 2014 T6 ALUM. ALLOY QQ-A-261/266

F_{tu} = 64000 PSI

F_{cy} = 59000 PSI ▷1

F_{su} = 39000 PSI

F_{bu} = F_b vs D/t OR F_b vs K

▷1 REF. 2 P. 66 ◁2 REF. 2 P. 28

CALC	T. Burchill		REVISED	DATE
CHECK				
APR				
APR				

NOSE GEAR XV5A

H. W. LOUD MACHINE WORKS, INC.
637 EAST SECOND ST., POMONA, CALIFORNIA

1511L

RYAN

SECTION 6 CONT'D

4. BALL - APEX (1511L137)

MATL: 17-4 PH ST. STEEL

F_{tu} = 180000 PSI [1]

F_{su} = 109000 PSI

F_{bu} = Fb vs D/t or Fb vs K

[1] REF. 2 P. 28

CALC			REVISED	DATE
CHECK				
APR				
APR				

NOSE GEAR XV5A

1511L

RYAN

H. W. LOUD MACHINE WORKS, INC.
[illegible] SECOND ST., POMONA, CALIFORNIA

TORQUE LINK - UPPER (1511L135)

FIG. IX

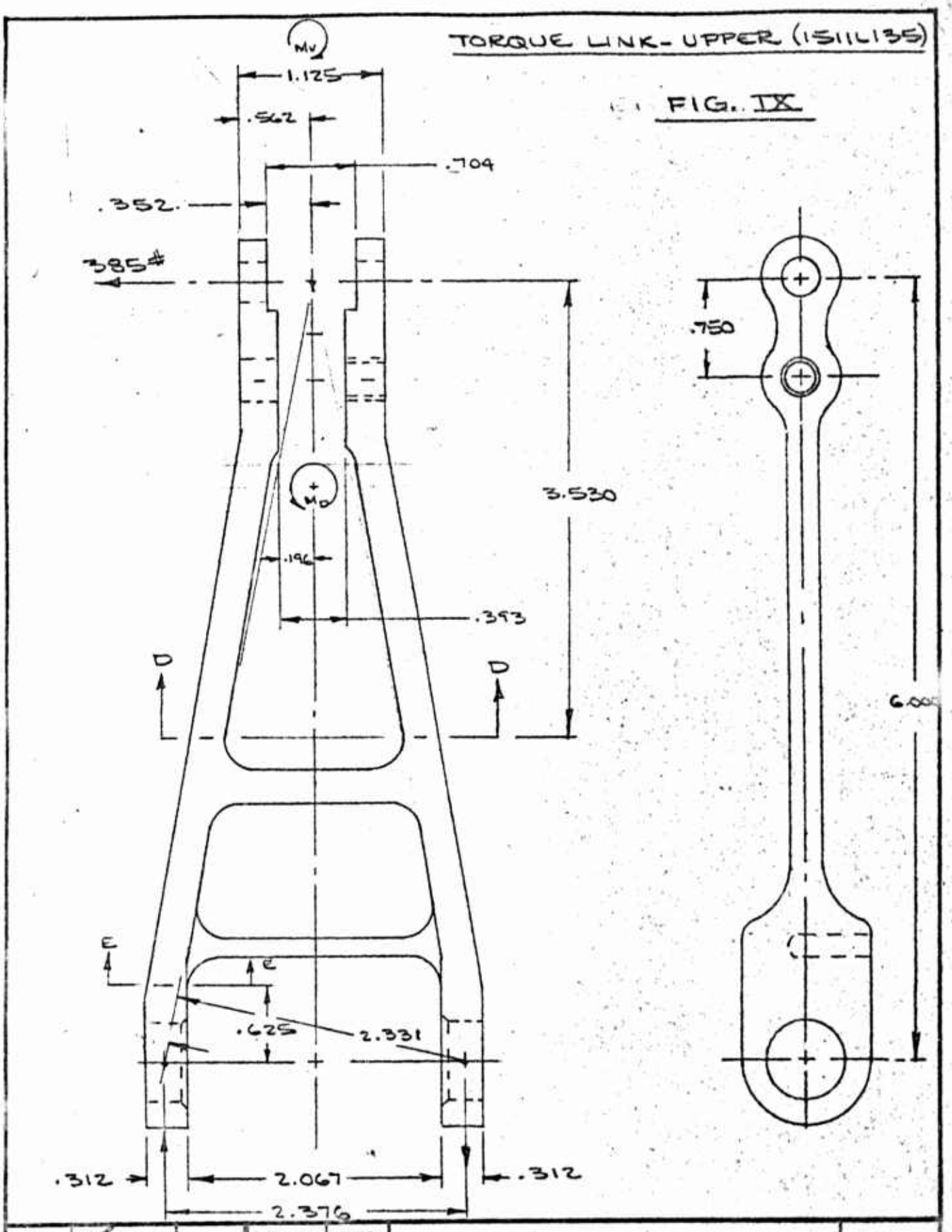

CALC			REVISED	DATE
CHECK				
APR				
APR				

NOSE GEAR XV5A

TORQUE LINK ANALYSIS

H. W. LOUD MACHINE WORKS, INC.
617 EAST [illegible] ST., [illegible], CALIFORNIA

1511L

RYAN

PAGE 275

TORQUE LINK - UPPER

SPREADING EARS .250 IN. TO ENGAGE BALL SOCKET

$$I = \frac{.24 \times .24^3}{12} = .00027 \text{ IN.}^4$$

$\delta = .125$

$E = 10.4 \times 10^6$

$L = 3.5$ IN.

$$\delta = \frac{PL^3}{3EI}$$

$$P = \frac{\delta 3EI}{L^3}$$

$$P = \frac{.125 \times 3 \times 10.4 \times 10^6 \times .00027}{3.5^3} = \frac{12.5 \times 3 \times 10.4 \times 2.7}{42.875}$$

$= 25\#$

$$f_{b_u} = \frac{3.5 \times 25 \times .125 \times 1.5}{.00027} = 60770 \text{ PSI (STRESS CAUSED BY SPREADING)}$$

CALC			REVISED	DATE
CHECK				
APR				
APR				

NOSE GEAR XV5A — 1511L

TORQUE LINK ANALYSIS — RYAN

H. W. LOUD MACHINE WORKS, INC.
807 EAST SECOND ST., POMONA, CALIFORNIA

PAGE 214

TORQUE LINK - UPPER

TURNING (FWD) 12500# CRITICAL

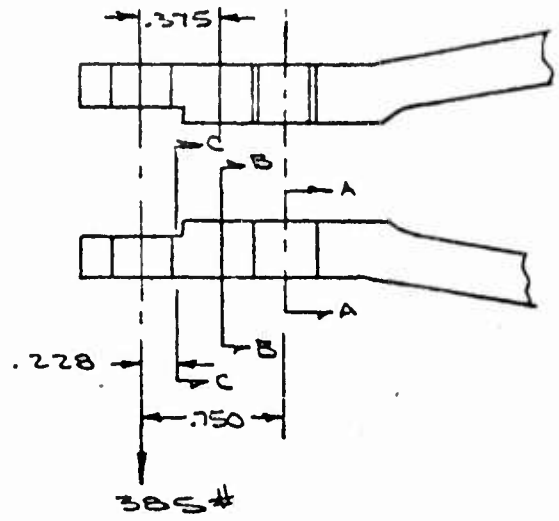

SECTION A-A

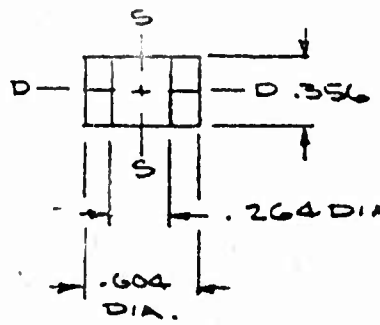

$M_P = .75 \times 385 = 289$ IN.#

$$I_{D\text{-}D} = \frac{.604 \times .356^3 - .264 \times .356^3}{12}$$

$$= \frac{.356^3 (.340)}{12} = .00126 \text{ IN.}^4$$

$$Q = \left[\frac{.356(.604 - .264)}{2}\right] \frac{.356}{4}$$

$$= .0054$$

$$K_{D\text{-}D} = \frac{2 \times .0054 \times .178}{.00126} = 1.526$$

USE $K_{D\text{-}D} = 1.50$

$$F_{bu} = \left(\frac{64}{65}\right) 92000 = 90528 \text{ PSI}$$

▷1 REF. P. 313

CALC			REVISED	DATE
CHECK				
APR				
APR				

NOSE GEAR XV5A — 1511L

TORQUE LINK ANALYSIS — RYAN

H. W. LOUD MACHINE WORKS, INC.
807 EAST SECOND ST., POMONA, CALIFORNIA

PAGE 215

TORQUE LINK - UPPER

SECTION A-A CONT'D

$A_S = .356\,(.604 - .264) = .121 \text{ IN.}^2$

$f_{bu} = \dfrac{289 \times .178 \times 1.5}{.00126} = 61268 \text{ PSI}$

$R_{bu} = \dfrac{61268}{90528} = \underline{.677}$

$f_{su} = \dfrac{385 \times 1.5}{.121} = 4773 \text{ PSI}$ $\qquad R_{su} = \dfrac{4773}{39000} = \underline{.122}$

$M.S. = \dfrac{1}{.677 + .122} - 1 = \underline{\underline{.45}}$

SECTION B-B

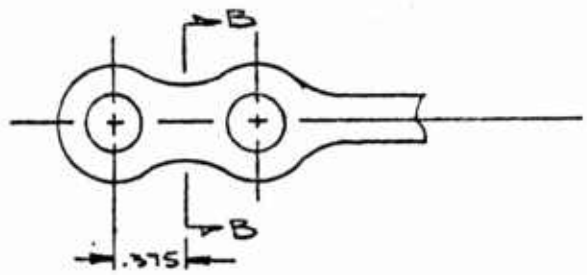

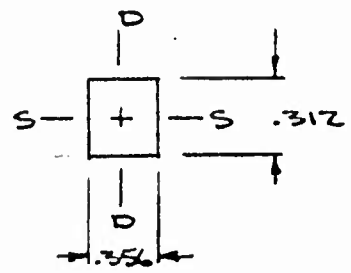

$A_S = .356 \times .375 = .111 \text{ IN.}^2$

$I_{D-D} = \dfrac{.312 \times .356^3}{12} = .00117 \text{ IN.}^4$ $\qquad K = 1.50$

$f_{bu} = \dfrac{.375 \times 385 \times .178 \times 1.5}{.00117} = 32918 \text{ PSI}$

$R_{bu} = \dfrac{32918}{90528} = .364$

$f_{su} = \dfrac{385 \times 1.5}{.111} = 5203 \text{ PSI}$ $\qquad R_{su} = \dfrac{5203}{39000} = .133$

$M.S. = \dfrac{1}{.364 + .133} - 1 = \underline{\underline{1.58}}$

CALC	[signature]		REVISED	DATE	NOSE GEAR XV5A	1511L
CHECK					TORQUE LINK ANALYSIS	RYAN
APR					H. W. LOUD MACHINE WORKS, INC. 887 EAST SECOND ST., POMONA, CALIFORNIA	PAGE 216
APR						

TORQUE LINK - UPPER

SECTION C-C

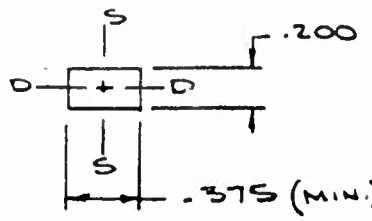

$A_S = .200 \times .375 = .075$ IN.^{2}

$I_{D-D} = \frac{.375 \times .200^3}{12} = .000248$ IN.^{4}

$K = 1.50$

$M_P = 385 \times .228 = 88$ IN.#

$$f_{bu} = \frac{88 \times .100 \times 1.5}{.000248} = 53196 \text{ PSI}$$

$$R_{bu} = \frac{53196}{90528} = \underline{.588}$$

$$f_{su} = \frac{385 \times 1.5}{.075} = 7700 \text{ PSI} \qquad R_{su} = \frac{7700}{39000} = \underline{.197}$$

$$M.S. = \frac{1}{.588 + .197} - 1 = \underline{\underline{.61}}$$

CALC	[signature]		REVISED	DATE	NOSE GEAR XV5A	1511L
CHECK					TORQUE LINK ANALYSIS	RYAN
APR					H. W. LOUD MACHINE WORKS, INC.	PAGE
APR					337 East Second St., Pomona, California	217

TORQUE LINK - UPPER CONT'D

SECTION D-D

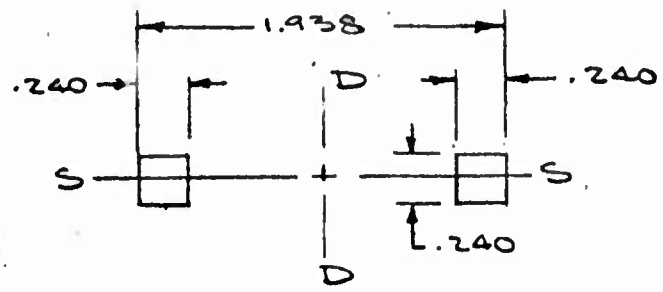

$A = .240\ (1.938 - 1.458) = .115\ \text{IN.}^2$

$I_{D\text{-}D} = \dfrac{.240 \times 1.938^3}{12} - \dfrac{.240 \times 1.458^3}{12} = .0836\ \text{IN.}^4$

$M_D = 3.530 \times 385 = 1359\ \text{IN.\#}$ ▷1

$Q_{D\text{-}D} = (.240)^2 \times .849 = .0489$

$K_{D\text{-}D} = \dfrac{2 \times .0489 \times .969}{.0836} = 1.13$

$F_{bU} = \left(\dfrac{64}{65}\right) 72000 = 70891\ \text{PSI}$ ◁2

$fb_{D\text{-}D} = \dfrac{1359 \times .969 \times 1.5}{.0836} = 23628\ \text{PSI}$

$R_{bD\text{-}D} = \dfrac{23628}{70891} = .333$

$f_{SU} = \dfrac{385 \times 1.5}{.115} = 5022\ \text{PSI}$ $\quad R_{SU} = \dfrac{5022}{39000} = .129$

$M.S. = \dfrac{1}{.333 + .129} - 1 = 1.79$

◁2 REF. P. 313

▷1 REF. P. 213

CALC			REVISED	DATE
CHECK				
APR				
APR				

NOSE GEAR XV5A — 1511L

TORQUE LINK ANALYSIS — RYAN

H. W. LOUD MACHINE WORKS, INC.
887 EAST SECOND ST., FULLERTON, CALIFORNIA

PAGE 2.18

TORQUE LINK - UPPER

SECTION E-E

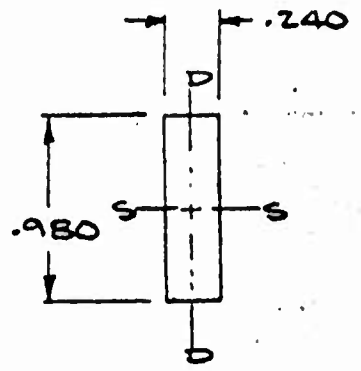

$A_{SECT} = .240 \times .980 = .235 \text{ IN.}^2$

$I_{D-D} = .0011 \text{ IN.}^4$

$K = 1.50$

$F_{bU} = 96000 \text{ PSI}$ (1)

$$P_{COL} = \frac{6.000 \times 385}{2.331} = 991 \#$$ (2)

$$M_{D-D} = .625 \times 385 = 241 \text{ IN.}\#$$

$$f_{b_{D-D}} = \frac{241 \times .120 \times 1.5}{.0011} = 39404 \text{ PSI}$$

$$R_{b\,D-D} = \frac{39404}{96000} = .410$$

$$\text{LUG LOAD} = \frac{385 \times 6.000}{2.376} = 972 \#$$

$$f_{tU} = \frac{972 \times 1.5}{.235} = 6204 \text{ PSI} \qquad R_{tU} = \frac{6204}{64000} = .097$$

$$f_{SU} = \frac{385 \times 1.5}{.235} = 2460 \text{ PSI} \qquad R_{SU} = \frac{2460}{39000} = .063$$

$$M.S. = \frac{1}{(.410 + .097) + .063} - 1 = .95$$

(2) REF. P. 213

(1) REF. P. 313

CALC	Woodruff		REVISED	DATE	NOSE GEAR XV5A	1511L
CHECK					TORQUE LINK ANALYSIS	RYAN
APR					H. W. LOUD MACHINE WORKS, INC. 887 EAST SECOND ST., POMONA, CALIFORNIA	PAGE 219
APR						

PIN - TORQUE LINK (1511L134)

TURNING (FWD) 12500#

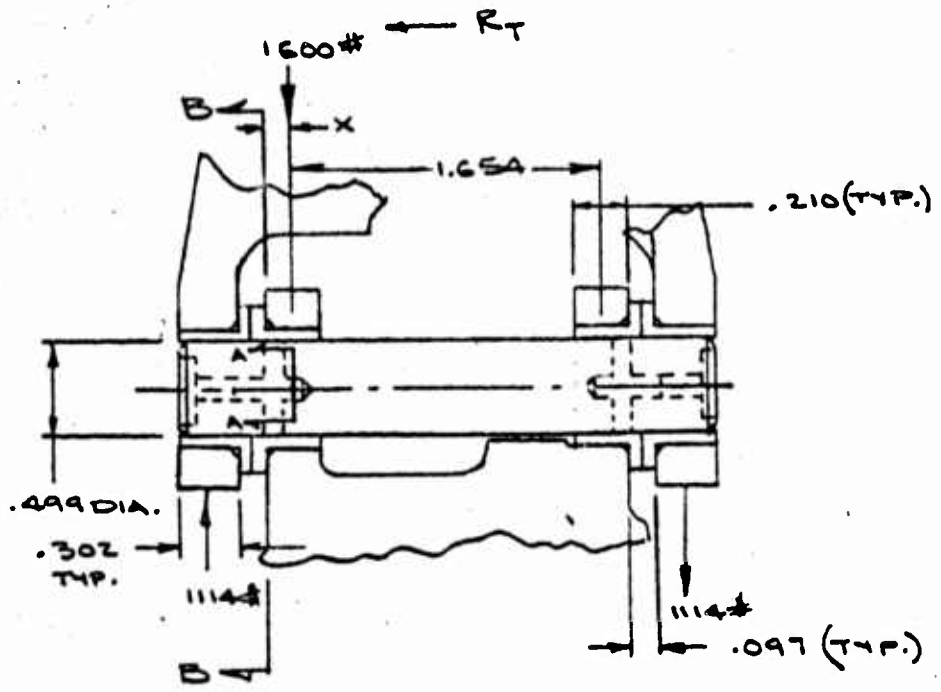

R_T = 385#

$P_{COLLAR\ WG} = \frac{6.875 \times 385}{1.654} = 1600\#$ ▷1

O.D. = .499	.196		.0030043
I.D. = .126	.012		.0000125
2t = .373	A =	.184 in.^{2}	.0030168 in.^{4}
t = .1865			

D/t = 2.68

F_{bu} = 330000 PSI ◁2

◁2 REF. P. 316

▷1 REF. P. 149

CALC	Bischit		REVISED	DATE	NOSE GEAR XVSA	1511L
CHECK					PIN ANALYSIS	RYAN
APR					H. W. LOUD MACHINE WORKS, INC. 887 EAST SECOND ST., POMONA, CALIFORNIA	PAGE 220
APR						

PIN - TORQUE LINK - CONTD

ASSUME UNIFORM LOAD DISTRIBUTION

$$q_{\substack{COLLAR\\LUG}} = \frac{1600}{.210} = 7620\#/IN.$$

$$P_{LUG} = \frac{385 \times 6.875}{2.376} = 1114\#$$

$$x = \frac{1114 \times .210}{1600} = .146 \text{ IN.}$$

SECTION A-A

$$M_{MAX.} = \left(.146 + .097 + \frac{.302}{2}\right)1114 - (.146)(7620)\left(\frac{.146}{2}\right)$$

$$= 439 - 81 = 358 \text{ IN.}\#$$

$$f_{bu} = \frac{358 \times .2495 \times 1.5}{.003} = 44660 \text{ PSI}$$

$$M.S. = \frac{330000}{1.15 \times 44660} - 1 = \underline{\underline{+LGE}}$$

3.9

CALC			REVISED	DATE	NOSE GEAR XV5A PIN ANALYSIS	1511L
CHECK						RYAN
APR					H. W. LOUD MACHINE WORKS, INC. 887 EAST SECOND ST., POMONA, CALIFORNIA	PAGE 221
APR						

PIN - TORQUE LINK - CONTD

SECTION B-B

$A = .184 \text{ IN.}^2$

$I = .0030 \text{ IN.}^4$

$M = \left(.097 + \frac{.302}{2}\right) 1114 = 276 \text{ IN.\#}$

$f_{bu} = \frac{276 \times .2495 \times 1.5}{.003} = 34430 \text{ PSI}$

$R_{bu} = \frac{34430}{330000} = .104$

$f_{su} = \frac{1114 \times 1.5}{.184} = 9080 \text{ PSI}$ $\quad R_{su} = \frac{9080}{109000} = .083$

$$M.S. = \frac{1}{1.15\,(.104 + .083)} - 1 = +\text{LGE}$$

(1)

(1) FITTING FACTOR

CALC			REVISED	DATE
CHECK				
APR				
APR				

NOSE GEAR XV5A

PIN ANALYSIS

1511L

RYAN

H. W. LOUD MACHINE WORKS, INC.
887 EAST SECOND ST., POMONA, CALIFORNIA

PAGE 222

TORQUE LINK 1511L136
TURNING (FWD) F.E.-5.3
(12500#) CRITICAL

FIG. X

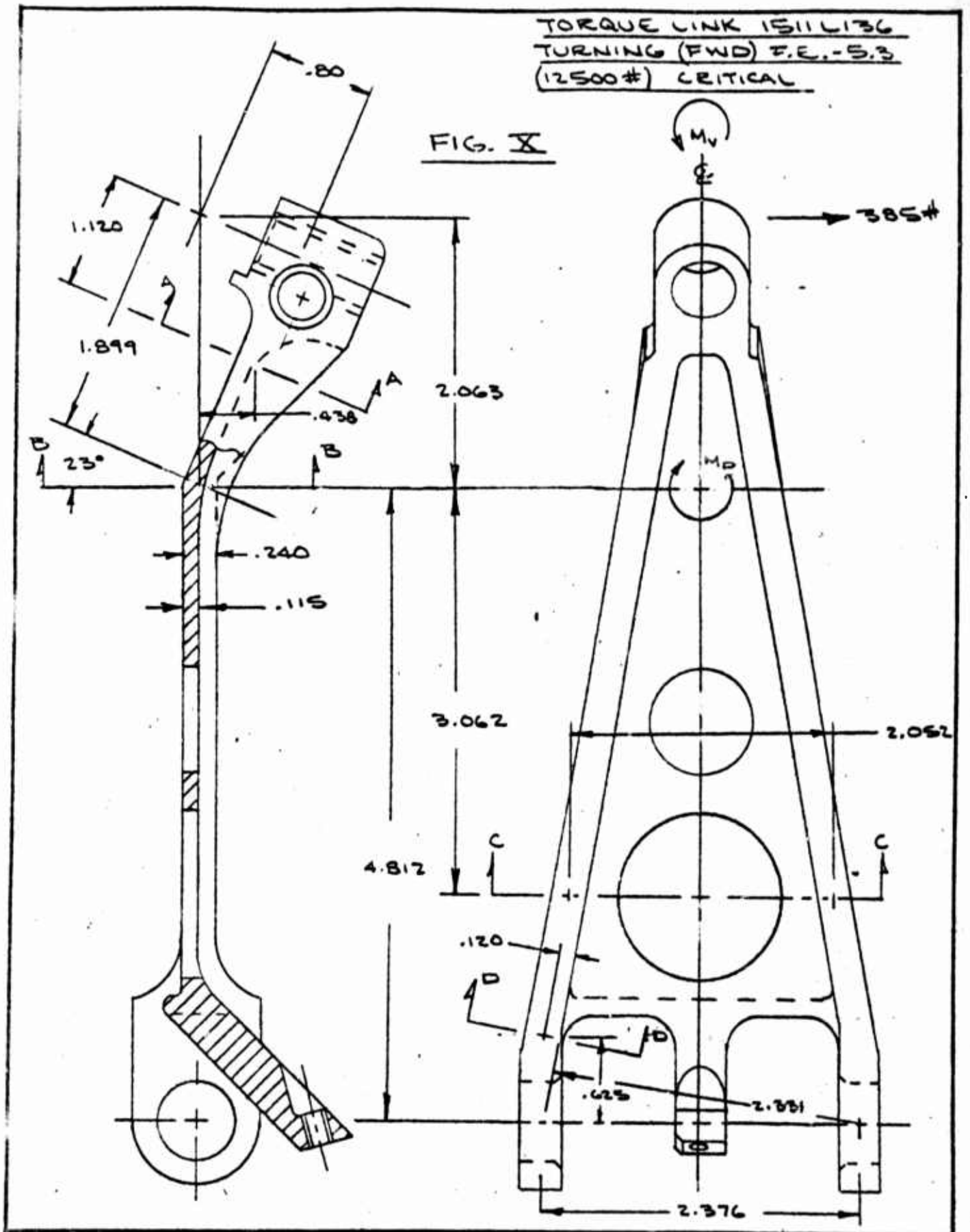

CALC			REVISED	DATE
CHECK				
APR				
APR				

NOSE GEAR XV5A
TORQUE LINK ANALYSIS

1511L
RYAN

H. W. LOUD MACHINE WORKS, INC.
887 EAST SECOND ST., POMONA, CALIFORNIA

TORQUE LINK - LOWER (1511L136)

TURNING (FWD) 12500# CRITICAL

SECTION A-A

R_T = MAX. APEX LOAD = 385# ▷1

$$X = \frac{.438}{\cos 23^\circ} = \frac{.438}{.9205} = .476$$

TORQUE T = .476 X 385 = 183 IN.#

SECT. A-A (MIN. SECTION) NEGLECTING FILLETS

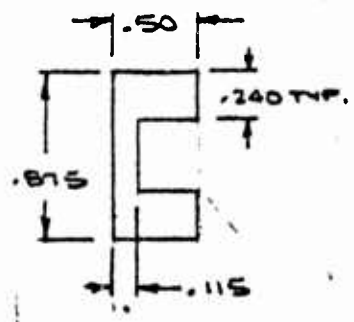

$$f_{st} = \frac{T}{\alpha b t^2} \quad ◁2$$

b = .500 + .500 + .875 = 1.875

t = .115

b/t = 1.875/.115 = 16.30

α = .333

$$f_{st} = \frac{183 \times 1.5}{.333 \times 1.875 \times .013} = 33820 \text{ PSI}$$

$$M.S. = \frac{39000}{33820} - 1 = \underline{.15}$$

◁2 REF. 4 P. 331

▷1 REF. P. 149

CALC	[signature]		REVISED	DATE	NOSE GEAR XV5A	1511L
CHECK					TORQUE LINK ANALYSIS	RYAN
APR					H. W. LOUD MACHINE WORKS, INC. 887 EAST SECOND ST., POMONA, CALIFORNIA	PAGE 224
APR						

TORQUE LINK LOWER

SECTION B-B

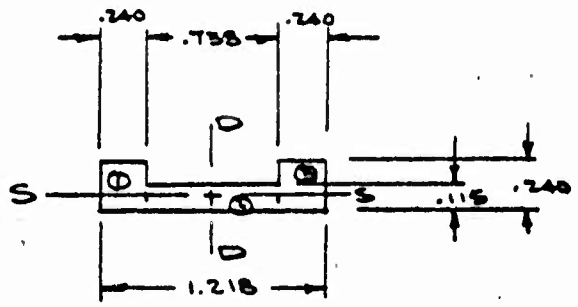

		A	D	S	AD	AS	AD^2	AS^2	$I_{o_{S-S}}$	$I_{o_{D-D}}$
1	.240x.240	.0576	.120	1.098	.0069	.0632	.0008	.0694	.00028	.00028
2	.115x.738	.0849	.058	.609	.0049	.0517	.0003	.0315	.00009	.00386
3	.240x.240	.0576	.120	.120	.0069	.0069	.0008	.0008	.00028	.00028
	Σ	.2001			.0187	.1218	.0019	.1017	.00065	.0044

$$\bar{D} = \frac{\Sigma AD}{\Sigma A} = \frac{.0187}{.2001} = .093 \text{ IN.}$$

$$\bar{S} = \frac{\Sigma AS}{\Sigma A} = \frac{.1218}{.2001} = .609 \text{ IN.}$$

$I_{D-D} = .0044 + .1017 = .1061 \text{ IN.}^4$

$Q_{D-D} = .240 \times .240 \times .469 + .115 \times .369 \times .185 = .0358$

$K_{D-D} = \frac{2 \times .0358 \times .609}{.1061} = .410$ Use $K_{D-D} = 1.0$

$F_{b_{D-D}} = 64000 \text{ PSI}$ (1)

(1) REF. P. 313

CALC			REVISED	DATE	NOSE GEAR XV5A	1511L
CHECK					TORQUE LINK ANALYSIS	RYAN
APR.					H. W. LOUD MACHINE WORKS, INC. 887 EAST SECOND ST., POMONA, CALIFORNIA	PAGE 225
APR						

TORQUE LINK - LOWER (1511L136)

TURNING (FWD) F.E. - 5.3 (12500#) CRITICAL

SECTION B-B

$\sin 23° = .3907$

$\cos 23° = .9205$

R_T = MAX. APEX LOAD = $-385\#$

$M_V = .80\,(-385)\cos 23° = -283$ IN.#

$M_D = 385 \times 1.899 / \cos 23° = 793$ IN.#

OR:

$M_D = .80 \times 385 \sin 23° + 1.899 \times 385 \times \cos 23°$

$= 120 + 673 = 793$ IN.#

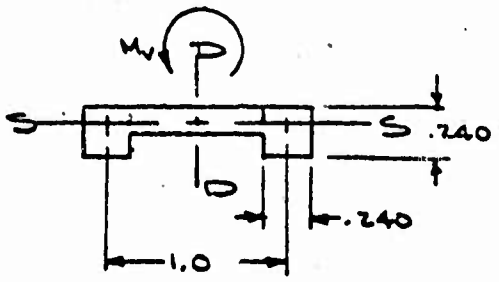

$A_S = .240^2 = .058$ IN.^{2}

$P = \frac{283}{1.0} = 283\#$

$F_{b_{D-D}} = 64000$ PSI ▷1

$f_{b_{D-D}} = \frac{793 \times .609 \times 1.5}{.1061} = 6828$ PSI $\qquad R_{b_{D-D}} = \frac{6828}{64000} = \underline{.107}$

$f_{s_D} = \frac{283 \times 1.5}{.058} = 7328$ PSI $\qquad R_{s_D} = \frac{7328}{39000} = \underline{.188}$

$f_{s_S} = \frac{385 \times 1.5}{.2001} = 2886$ PSI $\qquad R_{s_S} = \frac{2886}{39000} = \underline{.074}$

$$M.S. = \frac{1}{.107 + (.188 + .074)} - 1 = \underline{+LGE}$$

▷1 REF. P. 225

CALC	[signature]		REVISED	DATE	NOSE GEAR XV5A	1511L
CHECK					TORQUE LINK ANALYSIS	RYAN
APR					H. W. LOUD MACHINE WORKS, INC. 887 EAST SECOND ST., POMONA, CALIFORNIA	PAGE 226
APR						

TORQUE LINK - LOWER

TURNING (FWD) 12500# CRITICAL

SECTION C-C (5.125 IN. FROM ℄ APEX)

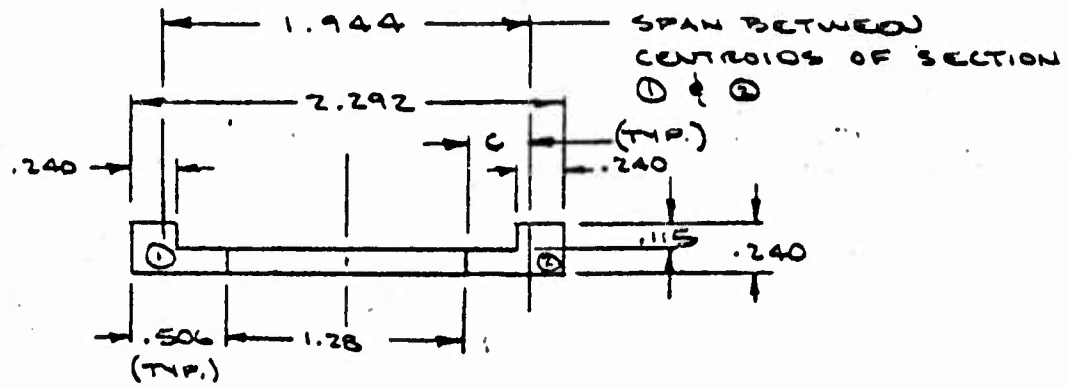

$$C = \frac{.240 \times .240 \times .386 + .188 \times .115 \times .188}{.240 \times .240 + .188 \times .115} = \frac{.0263}{.0792} = .332 \text{ IN.}$$

$$\text{SPAN} = 1.28 + .332 + .332 = 1.944 \text{ IN.}$$

$$P = \frac{M_V}{2.052} \text{ ①} = \frac{283}{2.052} = 138\#$$

$$A_{SECT.} = 2(.0792) = .158 \text{ IN.}^2$$

$$A = .240^2 = .058 \text{ IN.}^2$$

$$f_{SD} = \frac{138 \times 1.5}{.058} = 3569 \text{ PSI}$$

$$R_{SD} = \frac{3569}{39000} = \underline{.092}$$

$$f_{tu} = \frac{M_D \times 1.5}{1.944 \times .158} = \frac{385 \times 6.125 \times 1.5}{1.944 \times .158} = 11516 \text{ PSI}$$

$$R_{tu} = \frac{11516}{64000} = \underline{.180}$$

$$M.S. = \frac{1}{.180 + .092} - 1 = \underline{\underline{+LGE}}$$

① REF. P. 226

CALC	[signature]		REVISED	DATE	NOSE GEAR XV5A	1511L
CHECK					TORQUE LINK ANALYSIS	RYAN
APR					H. W. LOUD MACHINE WORKS, INC. 887 EAST SECOND ST., POMONA, CALIFORNIA	PAGE 227
APR						

TORQUE LINK - LOWER

TURNING (FWD) 12500#

SECTION D-D (.625 IN. FROM ℄ LUG)

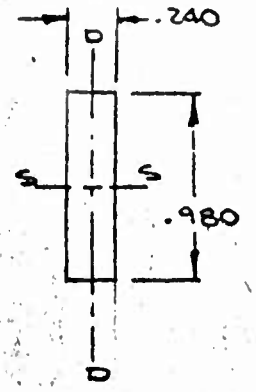

$$P_{COL.} = \frac{(4.812 + 2.063) \times 385}{2.331} = 1135\#$$

$$A_{SECT.} = .240 \times .980 = .235 \text{ IN.}^2$$

$$I_{D\text{-}D} = \frac{.980 \times .240^3}{12} = .0011 \text{ IN.}^4$$

$K = 1.50$ $\qquad F_{bu} = 1.50 \times F_{tu} = 96000 \text{ PSI}$

$$M_{D\text{-}D} = .625 \times 385 + .120 \times 1135 = 377 \text{ IN.\#}$$

$$fb_{D\text{-}D} = \frac{377 \times .120 \times 1.5}{.0011} = 61690 \text{ PSI}$$

$$Rb_{D\text{-}D} = \frac{61690}{96000} = .643$$

$$\text{LUG LOAD} = \frac{385 \times 6.875}{2.376} = 1114\#$$

$$ft_u = \frac{1114 \times 1.5}{.235} = 7110 \text{ PSI} \qquad R_{tu} = \frac{7110}{64000} = .111$$

$$f_{su} = \frac{385 \times 1.5}{.235} = 2460 \text{ PSI} \qquad R_{su} = \frac{2460}{39000} = .063$$

$$M.S. = \frac{1}{(.643 + .111) + .063} - 1 = .32$$

CALC	Brackett		REVISED	DATE	NOSE GEAR XV5A	1511L
CHECK					TORQUE LINK ANALYSIS	RYAN
APR					H. W. LOUD MACHINE WORKS, INC. 897 EAST SECOND ST., POMONA, CALIFORNIA	PAGE 228
APR						

TORQUE LINK - LOWER CONT'D

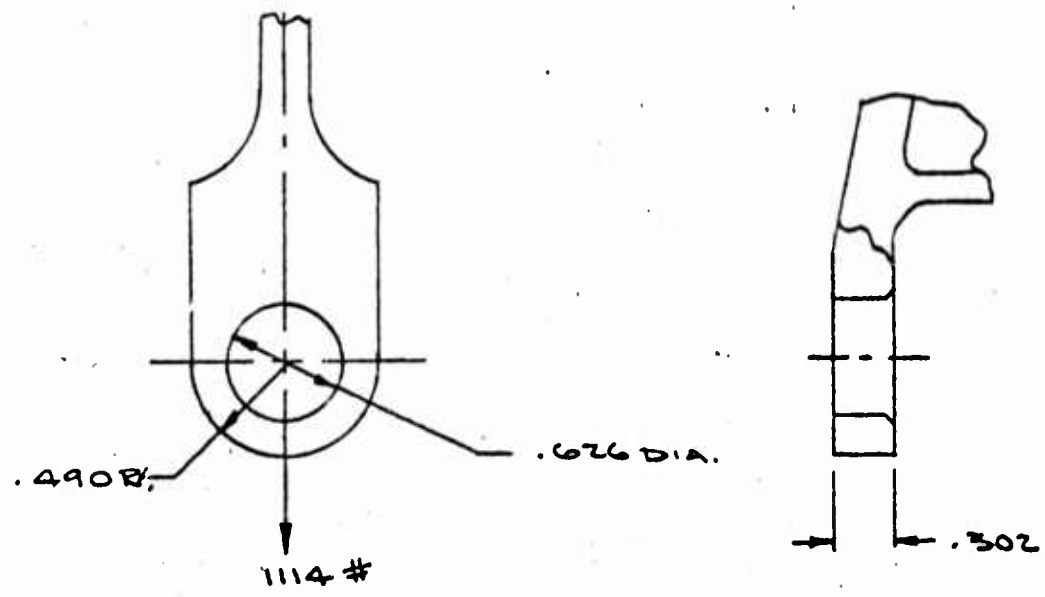

$W = .980$ IN.
$d = .626$ IN.
$t = .302$
$a = .490$
$W/t = 3.25$

$a/d = .783$
$K_{br} = .48$ $K_t = .92$
$A_{br} = dt = .189$ IN.^{2}
$A_t = (W-d)t = .107$ IN.^{2}

TENSION

$$P_{tu} = K_t F_{tu} A_t = .92 \times 55000 \times .107 = 5414\#$$

$$M.S. = \frac{5414}{1.15 \times 1114 \times 1.5} - 1 = \underline{1.82}$$

CALC			REVISED	DATE	NOSE GEAR XVSA	1511L
CHECK					TORQUE LINK ANALYSIS	RYAN
APR					H. W. LOUD MACHINE WORKS, INC. 887 EAST SECOND ST., POMONA, CALIFORNIA	PAGE 229
APR						

TORQUE LINK-LOWER CONT'D

SHEAR BEARING

$P'_{b_{ru}} = K_{b_r} F_{tux} A_{b_r}$ $\qquad F_{tux} = 64000$ PSI

$= .48 \times 64000 \times .189 = 5806\#$

$$M.S. = \frac{5806}{1.15 \times 1114 \times 1.5} - 1 = \underline{\underline{2.02}}$$

LUG YIELD

$$\frac{P'_u(MIN)}{A_{b_r} F_{tu}} = \frac{5806}{.189 \times 64000} = .48 \qquad \therefore C = 1.1$$

$$P'_y = C\left(\frac{F_{tyx}}{F_{tux}}\right) P'_u(MIN) = 1.1\left(\frac{64}{64}\right) 5806 = 6387\#$$

$$\text{YIELD M.S.} = \frac{1.5 \times 6387}{1.15 \times 1114 \times 1.5} - 1 = \underline{\underline{+1.66}}$$ 3.99

CALC	[illegible]		REVISED	DATE	NOSE GEAR XV5A	1511L
CHECK					TORQUE LINK ANALYSIS	RYAN
APR					H. W. LOUD MACHINE WORKS, INC. 887 EAST SECOND ST., POMONA, CALIFORNIA	PAGE 230
APR						

TORQUE LINK - LOWER CONT'D

LUG LOAD = 1114# (1)

BRG LENGTH = .302 - .040 = .262 IN.

I.D. MIN = .500

A_{brg} = .500 X .262 = .131 IN.^{2}

F_{bry} = 50000 PSI (2)

$$f_{brg} = \frac{1114 \times 1.5}{.131} = 12756 \text{ PSI}$$

$$M.S. = \frac{50000}{12756 \times 1.15} - 1 = \underline{\underline{2.41}}$$

(4)

BEARING ON TORQUE LINK LUG

F_{bry} = 77000 (3)

Brg LENGTH = .262 IN.

O.D. = .626

A_{brg} = .626 X .262 = .164 IN.^{2}

$$f_{brg} = \frac{1114 \times 1.5}{.164} = 10190 \text{ PSI}$$

$$M.S. = \frac{77000}{1.15 \times 10190} - 1 = \underline{\underline{+LGE}}$$

(4)

(2) REF. 2 P. 206

(1) REF. P. 228

(4) FITTING FACTOR

(3) REF. 2 P. 67

CALC	[signature]		REVISED	DATE	NOSE GEAR XV5A	1511L
CHECK					TORQUE LINK ANALYSIS	RYAN
APR					H. W. LOUD MACHINE WORKS, INC. 887 EAST SECOND ST., POMONA, CALIFORNIA	PAGE 231
APR						

TORQUE LINK – LOWER CONT'D

TURNING (FWD) 12500#

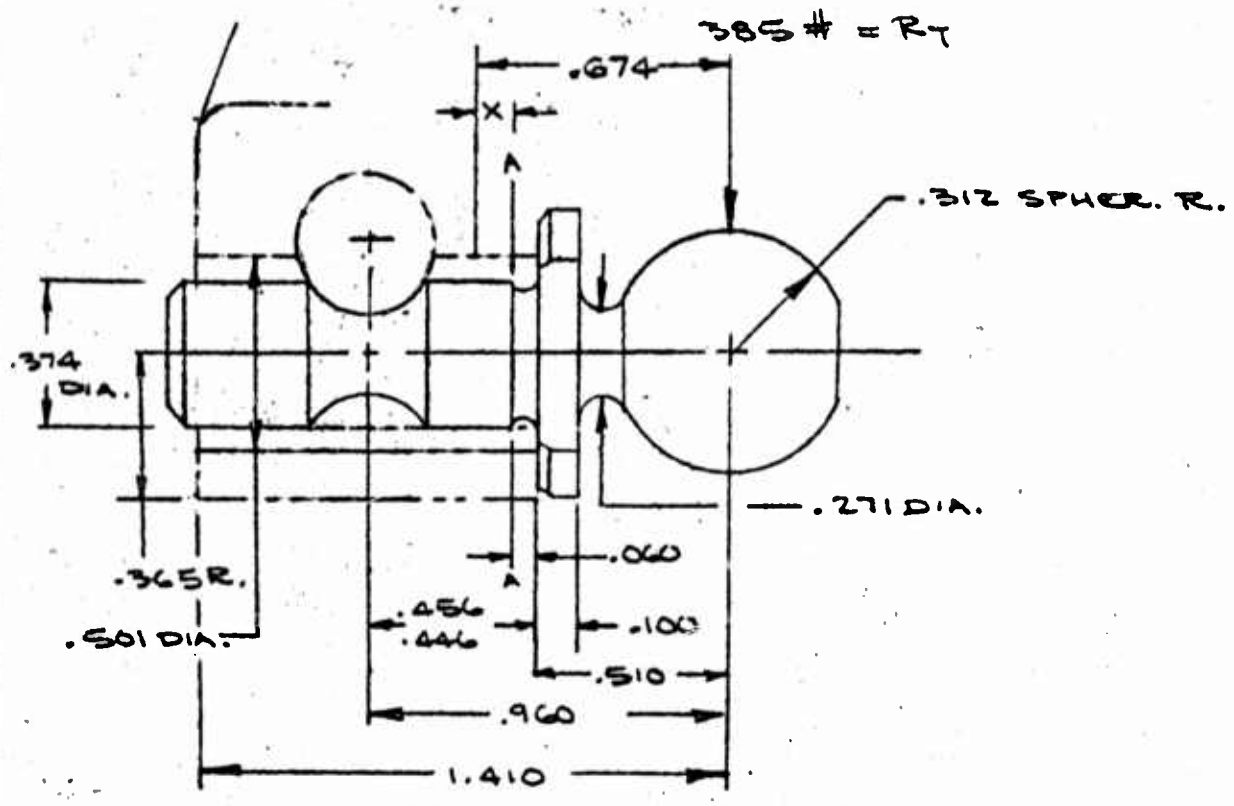

$S_{SHEAR} = R_T = 385\#$

AT A-A

$M = .570 \times 385 = 219$ IN. #

$$\frac{M}{SL} = \frac{219}{385 \times .900} = .631$$

$K_1 = 7.85$ $\qquad W_1 = \frac{K_1 S}{L} = \frac{7.85 \times 385}{.900} = 3358\#$

$K_2 = 5.80$ $\qquad W_2 = \frac{K_2 S}{L} = \frac{5.80 \times 385}{.900} = 2481\#$

CALC	[illegible]		REVISED	DATE	NOSE GEAR XV5A	1511L
CHECK					TORQUE LINK ANALYSIS	RYAN
APR						
APR					H. W. LOUD MACHINE WORKS, INC. 887 EAST SECOND ST., POMONA, CALIFORNIA	PAGE 232

TORQUE LINK - LOWER CONT'D

BEARING LOAD DISTRIBUTION

$$B_{br} = W_1 - \frac{W_1 + W_2}{L} x$$

$$= 3358 - \left(\frac{3358 + 2481}{.900}\right) x$$

$$= 3358 - 6488(x)$$

TOTAL MOMENT

$$M_T = (.570 + x)(385) = 219 + 385(x)$$

MOMENT ON SOCKET

$$M_S = \iint B_{br}\, dx\, dx = \iint (3358 - 6488)\, dx\, dx$$

$$= \frac{3358\,(x)^2}{2} - \frac{6488\,(x)^3}{6} = 1679(x)^2 - 1081(x)^3$$

MOMENT ON PIN

$$M_P = M_T - M_S$$

$$= 219 + 385(x) - 1679(x)^2 + 1081(x)^3$$

POINT OF MAX. BENDING ON PIN

M_P = MAX. WHERE $dM_P/dx = 0$

$$dM_P/dx = 385 - (1679x)2 + (1081x^2)3$$

$$= 385 - (3358x) + (3243x^2)$$

CALC	[signature]		REVISED	DATE	NOSE GEAR XV5A	1511L
CHECK					TORQUE LINK ANALYSIS	RYAN
APR					H. W. LOUD MACHINE WORKS, INC. 887 EAST SECOND ST., POMONA, CALIFORNIA	PAGE 233
APR						

TORQUE LINK - LOWER CONTD

SOCKET ANALYSIS

1ST .164 IN. FROM EDGE OF SOCKET

$X = .164/2 = .082$

AVG BEARING LOAD = $3358 - 6488(.082) = 2826\#/IN.$

$a = .365.$ $\quad a/D = .728$ $\quad K_{br} = .42$

$D = .501$

$t = .250$ $\quad A_{br} = Dt = .125 IN.^2$ $\quad K_t = .99$

$W = 2(.365) = .730$ $\quad A_t = (W-D)t = .057 IN.^2$

$W/D = 1.46$ $\quad F_{tux} = 65000 PSI$

$P_{br} = .250 \times 2826 = 707\#$

$P'_{br} = K_{br} A_{br} F_{tux} = .42 \times .125 \times 65000 = 3412\#$

$$M.S = \frac{3412}{1.15 \times 707 \times 1.5} - 1 = \underline{1.80}$$

$P_{tu} = .250 \times 2826 = 707\#$

$P'_{tu} = K_t A_t F_{tu} = .99 \times .057 \times 64000 = 3584\#$

$$M.S. = \frac{3584}{1.15 \times 707 \times 1.5} - 1 = \underline{1.94}$$

CALC	[signature]		REVISED	DATE	NOSE GEAR XV5A	1511L
CHECK					TORQUE LINK ANALYSIS	RYAN
APR					H. W. LOUD MACHINE WORKS, INC. 887 EAST SECOND ST., POMONA, CALIFORNIA	PAGE 234
APR						

TORQUE LINK - LOWER (CONT'D)

MIDDLE OF SOCKET = .900/2 = .450 IN.

$X = 1.410 - .450 = .960$ IN.

AVG BRG LOAD = $3358 - 6488(.960) = -2870$ #/IN.

$P_{br} = .250 \times 2870 = 718$ #

$P'_{br} = .42 \times .125 \times 65000 = 3412$ #

$M_S = 1679(.960)^2 - 1081(.960)^3 = 591$ IN.#

ASSUME TUBULAR SECTION (CONSERVATIVE)

O.D. = .730	.418	.0139
I.D. = .501	.196	.0031
$2t = .229$	$A = .222$ IN.	$I = .0108$ IN.^{4}
$t = .1145$		

$D/t = 6.4$

$F_{bu} = \left(\frac{64}{65}\right) 90000 = 88614$ PSI [1]

$f_{b_y} = \frac{591 \times .365 \times 1.5}{.0108} = 29960$ PSI

$R_b = \frac{29960}{88614} = .338$

$f_{s_{br}} = \frac{718 \times 1.5}{.222} = 4851$ PSI

$R_{s_{br}} = \frac{4851}{39000} = .124$

$M.S. = \frac{1}{.338 + .124} - 1 = 1.78$

[1] REF. P. 313

CALC			REVISED	DATE	NOSE GEAR XV5A	1511L
CHECK					TORQUE LINK ANALYSIS	RYAN
APR					H. W. LOUD MACHINE WORKS, INC. 807 EAST SECOND ST., POMONA, CALIFORNIA	PAGE 235
APR						

TORQUE LINK - LOWER (CONT'D)

LAST .250 IN. OF SOCKET

$X = 1.410 - .250/2 = 1.285$ IN.

AVE BRG LOAD $= 3358 - 6488(1.285) = -4979$ #/IN.

$P_{br} = .250 \times 4979 = 1245$ #

$P'_{br} = .42 \times .125 \times 65000 = 3412$ #

$$M.S. = \frac{3412}{1.15 \times 1245 \times 1.5} - 1 = .59$$

$P_{tu} = 1245$ #

$P'_{tu} = .99 \times .057 \times 64000 = 3584$ #

$$M.S. = \frac{3584}{1.15 \times 1245 \times 1.5} - 1 = .67$$

CALC	Brahl		REVISED	DATE
CHECK				
APR				
APR				

NOSE GEAR XV5A — 1511L

TORQUE LINK ANALYSIS — RYAN

H. W. LOUD MACHINE WORKS, INC.
867 EAST SECOND ST., POMONA, CALIFORNIA

BALL - APEX (1511L137)

POINT OF MAX. BENDING ON PIN - CONT'D

X = .131 IN.

MAX. PIN BENDING = .570 + .131 = .701

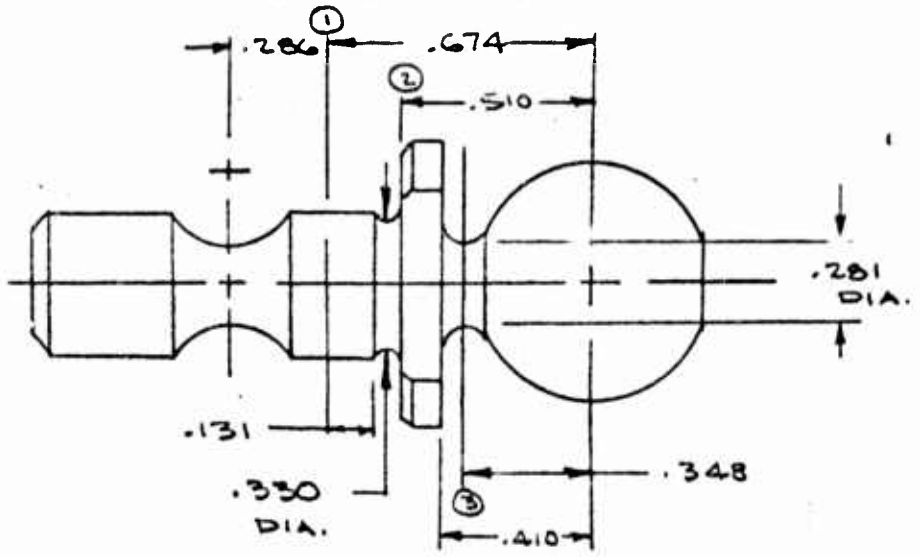

SECT. (1) MAX. BENDING POINT .674 IN. FROM ℄ BALL

$M_P = 219 + 385(.131) - 1679(.131)^2 + 1081(.131)^3$

$= 219 + 50.435 - 28.543 + 2.407 = 243$ IN.#

O.D. = .374 IN.

$A_{PIN} = .109$ IN.^{2}

$I = .00096$ IN.^{4}

D/t = 2

$F_{bu} = 300000$ PSI (1)

$f_{bu} = \frac{243 \times .187 \times 1.5}{.00096} = 71000$ PSI

M.S. $= \frac{300000}{71000} - 1 = \underline{+\text{LGE}}$

(1) REF. P. 316

CALC	[illegible]		REVISED	DATE	NOSE GEAR XVSA	1511L
CHECK					BALL ANALYSIS	RYAN
APR					H. W. LOUD MACHINE WORKS, INC. 887 EAST SECOND ST., POMONA, CALIFORNIA	PAGE 237
APR						

BALL - APEX CONTD

SECT. ② AT .510 IN. (AT EDGE OF SOCKET)

O.D. = .330 IN. $\quad A = .0855\ IN.^2 \quad I = .00057\ IN.^4$

$$f_{bu} = \frac{.510 \times 385 \times .165 \times 1.5}{.00057} = 85257 \text{ PSI}$$

$$R_{bu} = \frac{85257}{300000} = .284$$

$$f_{su} = \frac{.385 \times 1.5}{.0855} = 6754 \text{ PSI}$$

$$R_{su} = \frac{6754}{109000} = .062$$

$$M.S. = \frac{1}{.284 + .062} - 1 = \text{+LGE}$$

SECT. ③ AT .348 IN. FROM ℄ BALL

O.D. = .271 IN. $\quad A = .058\ IN.^2 \quad I = .000265\ IN.^4$

$$f_{bu} = \frac{385 \times .348 \times .1355 \times 1.5}{.000265} = 102795 \text{ PSI}$$

$$R_{bu} = \frac{102795}{300000} = .343$$

$$f_{su} = \frac{385 \times 1.5}{.058} = 9957 \text{ PSI}$$

$$R_{su} = \frac{9957}{109000} = .091$$

$$M.S. = \frac{1}{.343 + .091} - 1 = 1.81$$

CALC			REVISED	DATE
CHECK				
APR				
APR				

NOSE GEAR XV5A

BALL APEX

H. W. LOUD MACHINE WORKS, INC.
837 EAST SECOND ST., POMONA, CALIFORNIA

1511L

RYAN

PAGE 238

SECTION 7

1. PIN - DRAG BRACE (1511L146)

   MATL: 4140 STEEL

   F_{SU} = 109000 PSI ▷1

   F_{bU} = F_b vs D/t OR F_b vs K

2. DRAG BRACE - LOWER (1511L201)

   MATL: 7075 T6 ALUM. AL. PER QQ-A-277/282

   F_{tU} = 80000 PSI

   F_{cy} = 72000 PSI ◁2

   F_{SU} = 44000 PSI

3. DRAG BRACE - UPPER (1511L202)

   MATL: 7075 T6 ALUM. AL. PER QQ-A-277/282

   F_{tU} = 80000 PSI

   F_{cy} = 72000 PSI ◁2

   F_{SU} = 44000 PSI

4. BOLT - CROSSBEAM (1511L220)

   MATL: 7075 T6 ALUM. AL. PER QQ-A-282-1

   F_{SU} = 46000 PSI ▷3

5. CROSSBEAM (1511L203)

   MATL: 7075 T6 ALUM. AL. PER QQ-A-282

   F_{tU} = 77000 PSI

   F_{cy} = 66000 PSI ▷3

   F_{SU} = 46000 PSI

   F_{bU} = F_b vs D/t OR F_b vs K

6. PIN - TRUNNION (1511L204)

   MATL: 7075 T6 PER QQ-A-277 ◁2

   F_{tU} = 80000 PSI

▷1 REF. 2 P.28 ◁2 REF. 2 P.114 ▷3 REF. 2 P.113

CALC	Forchit		REVISED	DATE	NOSE GEAR XY5A	1511L
CHECK						RYAN
APR						
APR					H. W. LOUD MACHINE WORKS, INC. 887 EAST SECOND ST., POMONA, CALIFORNIA	PAGE 239

PIN - DRAG BRACE (1511L146)

SPRING BACK (FWD) 9200 # CRITICAL

$P_{BD} = -12364\ \#$ (1)

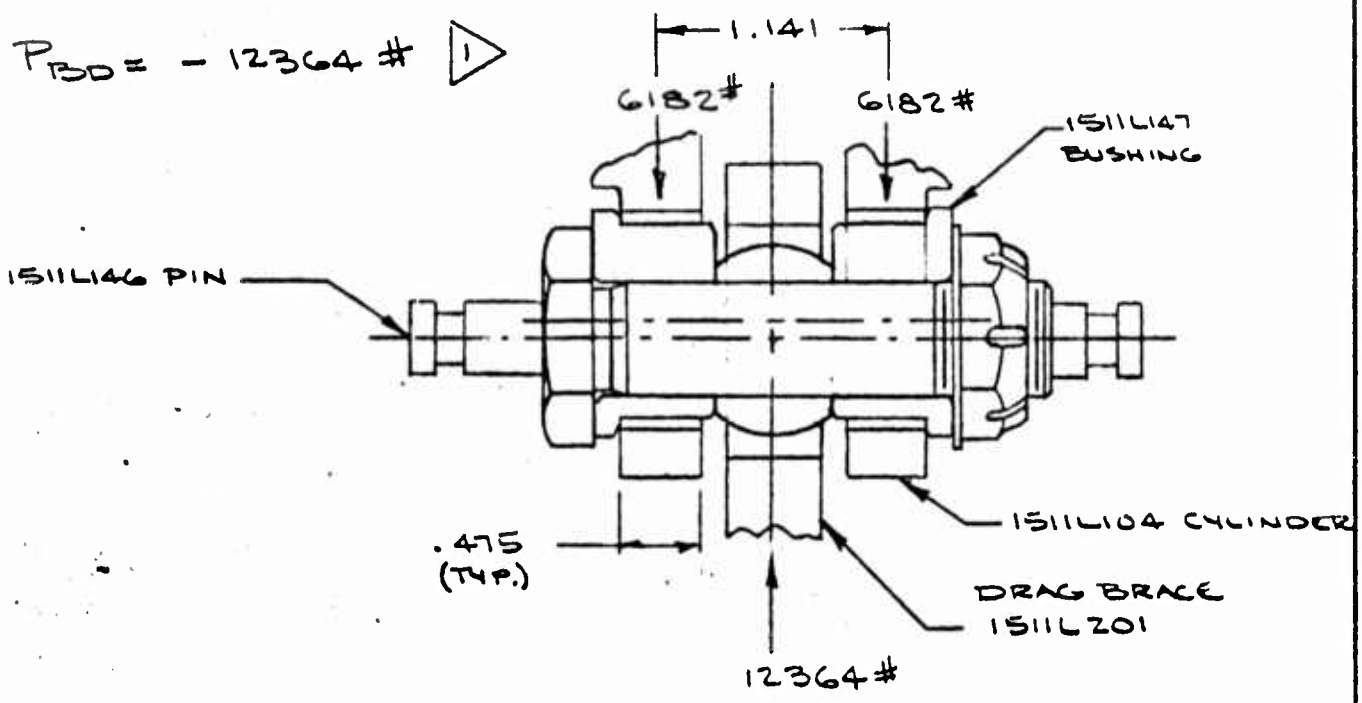

B.M. = $6182 \times .570 = 3524$ IN.#

SHEAR = 6182#

SECTION AT M.B.M. (CENTER)

O.D. = .6240 $A_S = .305$ IN.^{2} $I = .0074$ IN.^{4}

D/t = 2 $F_{bU} = 300000$ PSI (2) $F_{sU} = 109000$ PSI

$$f_{bU} = \frac{3524 \times .312 \times 1.5}{.0074} = 222868 \text{ PSI}$$

$$R_{bU} = \frac{222868}{300000} = .743$$

$$f_{sU} = \frac{12364 \times 1.5}{2 \times .305} = 30403 \text{ PSI} \qquad R_{sU} = \frac{30403}{109000} = .279$$

$$M.S. = \frac{1}{.743 + .279} - 1 = .26$$

(2) REF. P. 316

(1) REF. P. 146

CALC	Burchett		REVISED	DATE
CHECK				
APR				
APR				

NOSE GEAR XV5A — 1511L

PIN ANALYSIS — RYAN

H. W. LOUD MACHINE WORKS, INC.
867 EAST SECOND ST., POMONA, CALIFORNIA

PAGE 240

DRAG BRACE - LOWER (1511L201)

SPINUP (FWD) 9200# CRITICAL

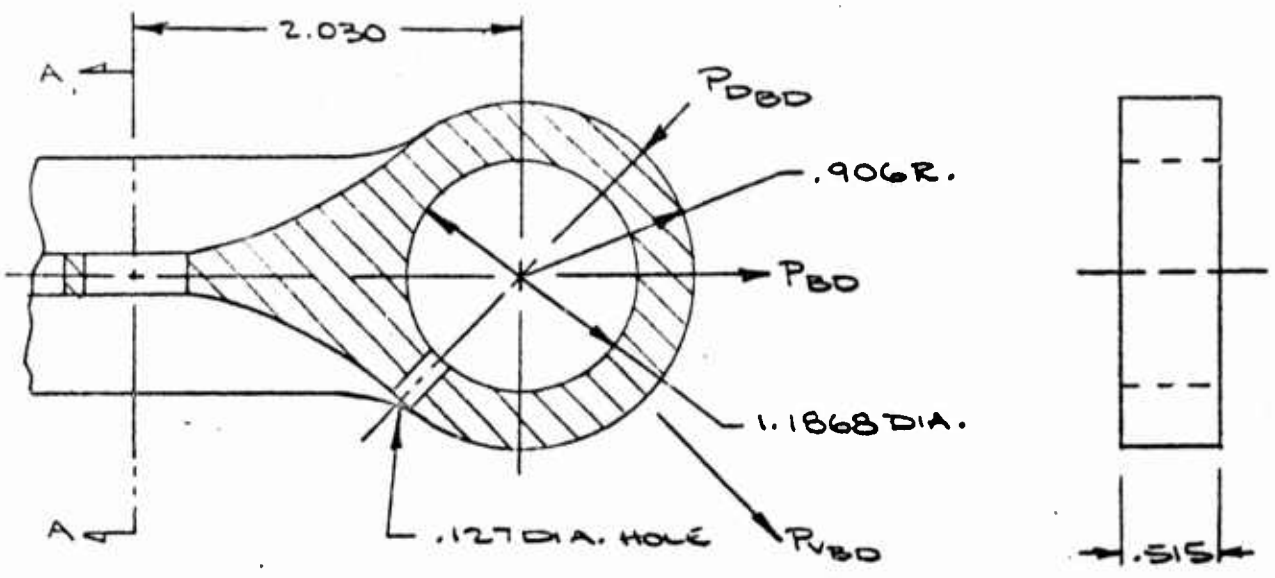

P_{BD} = 11832# (TENSION) (1)

P_{VBD} = 8330# (TENSION)

P_{DBD} = -8021# (COMPRESSION)

a = .906 a/D = .763

D = 1.187

W = 1.812

t = .515

W/D = 1.53

K_{br} = .500 K_t = .982

$A_{br} = Dt$ = .611 IN.^{2}

$A_{ti} = (W-D)t$ = .322 IN.^{2}

(1) REF. P.144

CALC			REVISED	DATE	NOSE GEAR XV5A	1511L
CHECK					DRAG BRACE ANALYSIS	RYAN
APR					H. W. LOUD MACHINE WORKS, INC. 887 EAST SECOND ST., POMONA, CALIFORNIA	PAGE 241
APR						

DRAG BRACE LOWER - CONT'D

TENSION

$$P'_{tu} = K_t F_{tu} A_t = .982 \times 80000 \times .322 = 25280\#$$

$$M.S. = \frac{25280}{1.15 \times 11832 \times 1.5} - 1 = \underline{.24}$$

SHEAR BR.G

$$P_{brw} = K_{br} F_{tuk} A_{br} = .500 \times 80000 \times .611 = 24440\#$$

$$M.S. = \frac{24440}{1.15 \times 11832 \times 1.5} - 1 = \underline{.20}$$

LUG YIELD

$$\frac{P'_{w(MIN)}}{A_{br} F_{tu}} = \frac{24440}{.611 \times 80000} = .500 \qquad \therefore C = 1.1$$

$$P'_y = C \left(\frac{F_{ty}}{F_{tu}}\right) P'_{w(MIN)} = 1.1 \left(\frac{72}{80}\right) 24440 = 24196\#$$

$$\text{YIELD M.S.} = \frac{1.5 \times 24196}{1.15 \times 11832 \times 1.5} - 1 = \underline{\underline{.78}}$$

CALC	[illegible]		REVISED	DATE	NOSE GEAR XV5A	1511L
CHECK					DRAG BRACE ANALYSIS	RYAN
APR					H. W. LOUD MACHINE WORKS, INC. 897 EAST SECOND ST., POMONA, CALIFORNIA	PAGE 242
APR						

DRAG BRACE LOWER - CONT'D

TENSION TEAROUT AT GREASE HOLE

$A_t = (W-D)t - .7854(.127)^2 = .3220 - .0126 = .3094\ IN.^2$

$P = P_{VED} = 8330\#$ $\qquad F_{tuk} = 65000\ PSI$ [1]

$f_{tu} = \frac{8330 \times 1.5}{.3094} = 17950\ PSI$

$M.S. = \frac{65000}{17950} - 1 = \underline{2.62}$

[1] REF. 2 P. 114

CALC			REVISED	DATE	NOSE GEAR XV5A	1511L
CHECK					DRAG BRACE ANALYSIS	RYAN
APR					H. W. LOUD MACHINE WORKS, INC. 887 EAST SECOND ST., POMONA, CALIFORNIA	PAGE 243
APR						

DRAG BRACE LOWER - CONTD

SECTION A-A

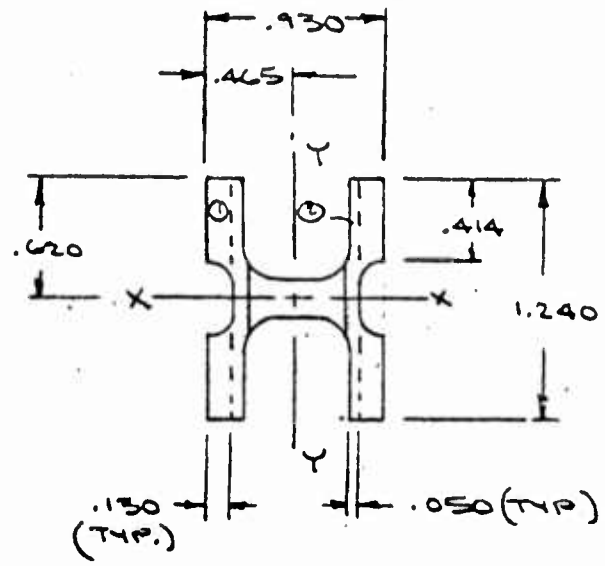

$A_1 = 4(.414).130 = .215$

$A_2 = 2(.050)1.240 = .124$

$\Sigma A = .339 \text{ IN.}^2$

$$I_{x-x} = \frac{.930 \times 1.240^3}{12} - \frac{.570 \times 1.240^3}{12} - \frac{2(.130 \times .385^3)}{12}$$

$$= .1478 - .0906 - .0012 = .056 \text{ IN.}^4$$

$$I_{y-y} = \frac{1.240 \times .930^3}{12} - \frac{1.240 \times .570^3}{12} - \frac{2(.385 \times .130^3)}{12}$$

$$= .0831 - .0191 - .0001 = .0639 \text{ IN.}^4$$

CALC			REVISED	DATE	NOSE GEAR XN5A	1511L
CHECK					DRAG BRACE ANALYSIS	RYAN
APR					H. W. LOUD MACHINE WORKS, INC. 807 EAST SECOND ST., POMONA, CALIFORNIA	PAGE 244
APR						

DRAG BRACE LOWER – CONT'D
SECTION A-A CONT'D

L = 11.236 IN.

$\rho = \sqrt{I/A} = \left[\frac{.056}{.339}\right]^{1/2} = .406$

$L' = L/C^{1/2} = L$ $\quad F_{co} = 1.075 F_{cy} = 77400$ PSI [1]

$L'/\rho = 11.236/.406 = 27.64$

TRANSITIONAL $L'/\rho = 1.414\pi\sqrt{E/F_{co}}$ [1]

$= 4.440\sqrt{\frac{10.3\times10^6}{7.74\times10^4}}$

$= 4.440\,(11.53) = 51.19$

SHORT COLUMN

$F_c = F_{co}\left[1 - F_{co}(L'/\rho)^2/4\pi^2 E\right]$ [1]

$= 77400\left[1 - 77400\,(27.64)^2/4(3.14)^2(10.3)\,10^6\right]$

$= 77400\left[1 - 7.74\,(7.64)\;/4(9.86)\,10.3\right]$

$= 77400\,(1 - 59.134/406.232) = 77400\,(1 - .146)$

$= 66100$ PSI

[1] REF. 2 P.141

CALC			REVISED	DATE	NOSE GEAR XV5A	1511L
CHECK					DRAG BRACE ANALYSIS	RYAN
APR					H. W. LOUD MACHINE WORKS, INC. 887 EAST SECOND ST., POMONA, CALIFORNIA	PAGE 245
APR						

DRAG BRACE LOWER CONTD

SECTION A-A CONTD

SPRINGBACK (FWD) 9200# CRITICAL

$P_{BD} = -12364\#$ (COMPRESSION) ▷1

$$f_c = \frac{12364 \times 1.5}{.339} = 54707 \text{ PSI}$$

$$M.S. = \frac{66100}{54707} - 1 = \underline{.21}$$

TENSION AT SECT. A-A

SPINUP (FWD) 9200# CRITICAL

$$f_{tu} = \frac{11832 \times 1.5}{.339} = 52355 \text{ PSI}$$

$$M.S. = \frac{80000}{52355} - 1 = \underline{.53}$$

▷1 REF. P. 146

CALC	Burchett		REVISED	DATE
CHECK				
APR				
APR				

NOSE GEAR XV5A

DRAG BRACE ANALYSIS

H. W. LOUD MACHINE WORKS, INC.
807 EAST SECOND ST., POMONA, CALIFORNIA

1511L

RYAN

PAGE 246

DRAG BRACE-UPPER (1511L202)

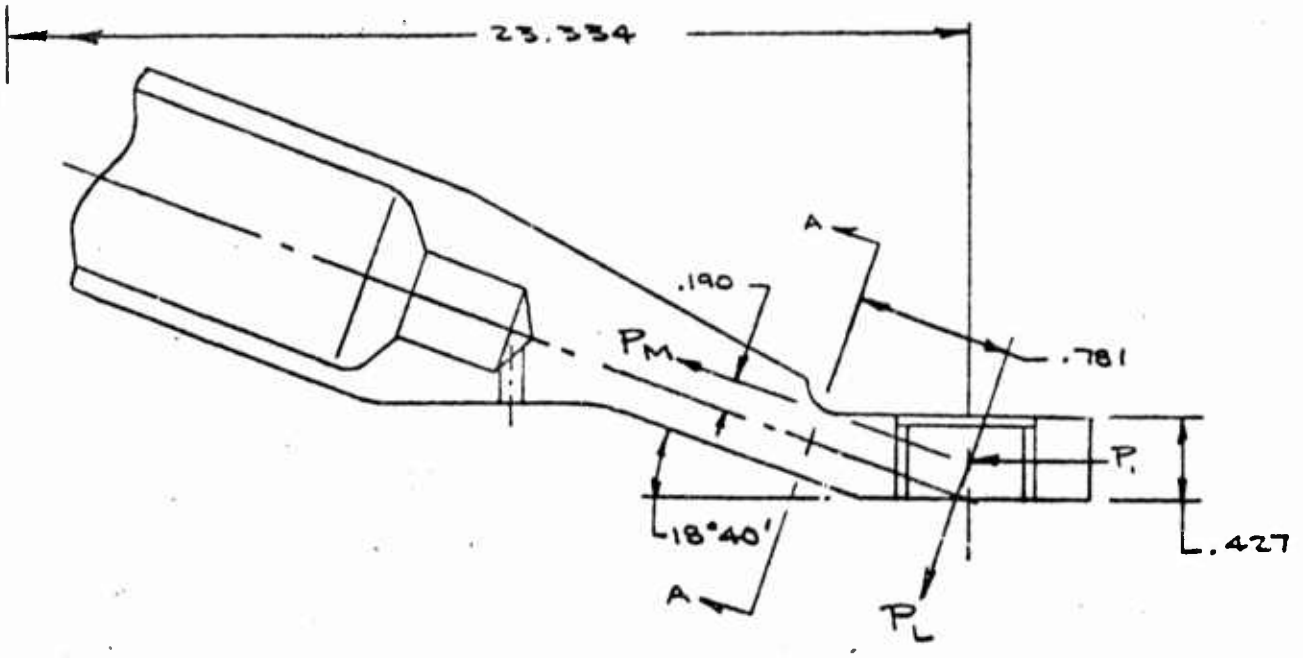

SECTION A-A

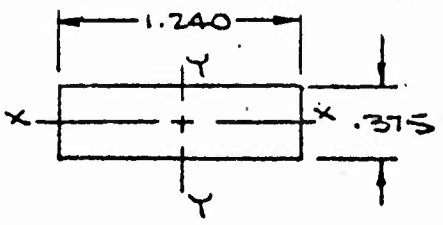

$A = .375 \times 1.240 = .465 \text{ IN.}^2$

$I_{x-x} = \frac{1.240 \times .375^3}{12} = .0054 \text{ IN.}^4$

$K = 1.5$

$F_{bu} = \left(\frac{80}{74}\right) 105000 = 113505 \text{ PSI}$ [1]

$\sin 18°40' = .3201$

$\cos 18°40' = .9474$

[1] REF. P. 314

CALC			REVISED	DATE	NOSE GEAR XV5A	1511L
CHECK					DRAG BRACE ANALYSIS	RYAN
APR					H. W. LOUD MACHINE WORKS, INC. 937 East Second St., Pomona, California	PAGE 247
APR						

DRAG BRACE-UPPER CONT'D

SPRINGBACK (FWD) 9200# CRITICAL SECTION A-A

P_1 = MAX. COMPRESSIVE LOAD = $P_{BD}/2$

= 12364/2 = 6182 #

P_M = 6182/cos 18°40' = 6525#

P_L = 6182 sin 18°40' = 1979 #

M_{A-A} = .781 P_L − .190 P_M = .781 × 1979 − .190 × 6525

= 306 IN. #

$$f_{bu} = \frac{306 \times .188 \times 1.5}{.0054} = 15980 \text{ PSI}$$

$$R_{bu} = \frac{15980}{113505} = \underline{.141}$$

$$f_c = \frac{6525 \times 1.5}{.465} = 21049 \text{ PSI}$$

$$R_c = \frac{21049}{72000} = \underline{.292}$$

$$M.S. = \frac{1}{.141 + .292} - 1 = \underline{1.31}$$

CALC	Bartlett		REVISED	DATE	NOSE GEAR XV5A	1511L
CHECK					DRAG BRACE ANALYSIS	RYAN
APR					H. W. LOUD MACHINE WORKS, INC. 887 EAST SECOND ST., POMONA, CALIFORNIA	PAGE 248
APR						

DRAG BRACE - UPPER CONT'D

SPINUP (FWD) 9200# CRITICAL

P_1 = MAX. TENSILE LOAD = 11832/2 = 5916#

P_M = 5916/.9474 = 6244#

P_L = 5916 (.3201) = 1894#

M_{A-A} = .781 X 1894 − .190 X 6244 = 293 IN.# ▷1

$f_{bu} = \frac{293 \times .188 \times 1.5}{.0054} = 15301$ PSI

$R_{bu} = \frac{15301}{113505} = .135$

$f_{tu} = \frac{6244 \times 1.5}{.465} = 20142$ PSI $\quad R_c = \frac{20142}{80000} = .252$

$$M.S. = \frac{1}{.135 + .252} - 1 = 1.58$$

▷1 REF. P. 247

CALC			REVISED	DATE
CHECK				
APR				
APR.				

NOSE GEAR XV5A

DRAG BRACE ANALYSIS

H. W. LOUD MACHINE WORKS, INC.
887 EAST SECOND ST., POMONA, CALIFORNIA

1511L

RYAN

PAGE 249

DRAG BRACE - UPPER CONT'D

COLUMN LOADING DUE TO COMPRESSION, SPRINGBACK (FWD) 9200 # CRITICAL

$F_{co} = 1.075\ F_{cy} = 1.075 \times 72000 = 77400$ PSI [1]

O.D. = 1.190	1.112	.0984
I.D. = 1.000	.785	.0491
	A = .327	I = .0493 IN.4

$$\rho = \sqrt{I/A} = \left[\frac{.0493}{.327}\right]^{1/2} = .388$$

$$L' = L/(C)^{1/2} = L$$

$$L'/\rho = 22.0/.388 = 56.70$$

TRANSITIONAL $L'/\rho = 1.414\,\pi\sqrt{E/F_{co}}$ [1]

$$= 4.440\left[\frac{10.3\times10^6}{7.74\times10^4}\right]^{1/2}$$

$$= 4.440\,(133.07)^{1/2} = 51.21$$

$$\therefore\ F_c = \pi^2 E/(L'/\rho)^2 = \frac{9.860\times10.3\times10^6}{56.70\times56.70} = \frac{101.558\times10^6}{3.215\times10^3}$$

$$= 31589 \text{ PSI}$$

$$f_c = \frac{6525\times1.5}{.327} = 29931 \text{ PSI}$$

$$M.S. = \frac{31589}{29931} - 1 = \underline{.055}$$

[1] REF. 2 P. 141

CALC			REVISED	DATE	NOSE GEAR XV5A	1511L
CHECK					DRAG BRACE ANALYSIS	RYAN
APR					H. W. LOUD MACHINE WORKS, INC. 807 EAST SECOND ST., POMONA, CALIFORNIA	PAGE 250
APR						

DRAG BRACE - UPPER CONTD

LUG ANALYSIS

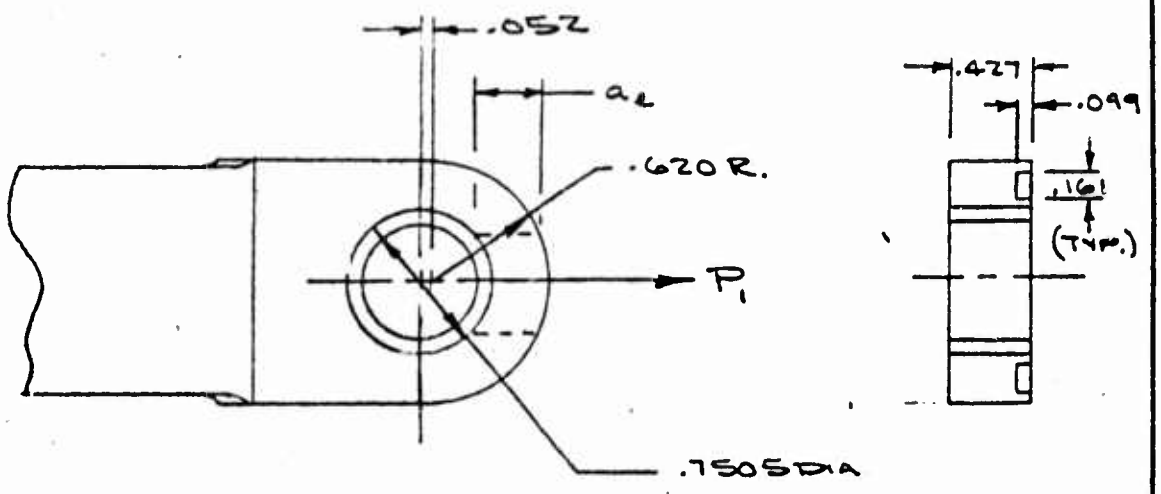

SPINUP (FWD) 9200# CRITICAL

$P_1 = 11832/2 = 5916\#$ ▷1

$$a_e = .052 + \sqrt{(.620)^2 - .1033(.7505)^2} - .383(.7505)$$

$$= .052 + \left[.384 - .058\right]^{1/2} - .287$$

$$= .052 + .572 - .287 = .337$$

$$A_S = 2(.337).427 = .288 \text{ IN.}^2$$

$$P_{SU} = 2(a_e)\, t\, F_{SU} = .288 \times 44000 = 12672\#$$

$$M.S. = \frac{12672}{1.15 \times 5916 \times 1.5} - 1 = \underline{.24}$$

▷1 REF. P. 241

CALC	Burchett		REVISED	DATE	NOSE GEAR XV5A	1511L
CHECK					DRAG BRACE ANALYSIS	RYAN
APR					H. W. LOUD MACHINE WORKS, INC. 887 EAST SECOND ST., POMONA, CALIFORNIA	PAGE 251
APR						

DRAG BRACE - UPPER CONT'D

LUG ANALYSIS - CONT'D

$P_{tu} = .9\ A_t\ F_{tu}$

$A_t = 2 \times .620 \times .427 - 2 \times .099 \times .161 - .7505 \times .427$

$= .529 - .032 - .320$

$= .177\ IN.^2$

$P_{tu} = .9 \times .177 \times 80000 = 12744\#$

$$M.S. = \frac{12744}{1.15 \times 5916 \times 1.5} - 1 = \underline{.25}$$

$P_{bru} = t\ D\ F_{bru} = .427 \times .7505 \times 96000 = 30764\#$

M.S. = $\underline{+LGE}$

CALC	Brodit		REVISED	DATE	NOSE GEAR XV5A	1511L
CHECK					DRAG BRACE ANALYSIS	RYAN
APR					H. W. LOUD MACHINE WORKS, INC. 657 EAST SECOND ST., POMONA, CALIFORNIA	PAGE 252
APR						

DRAG BRACE - UPPER (15111L202)

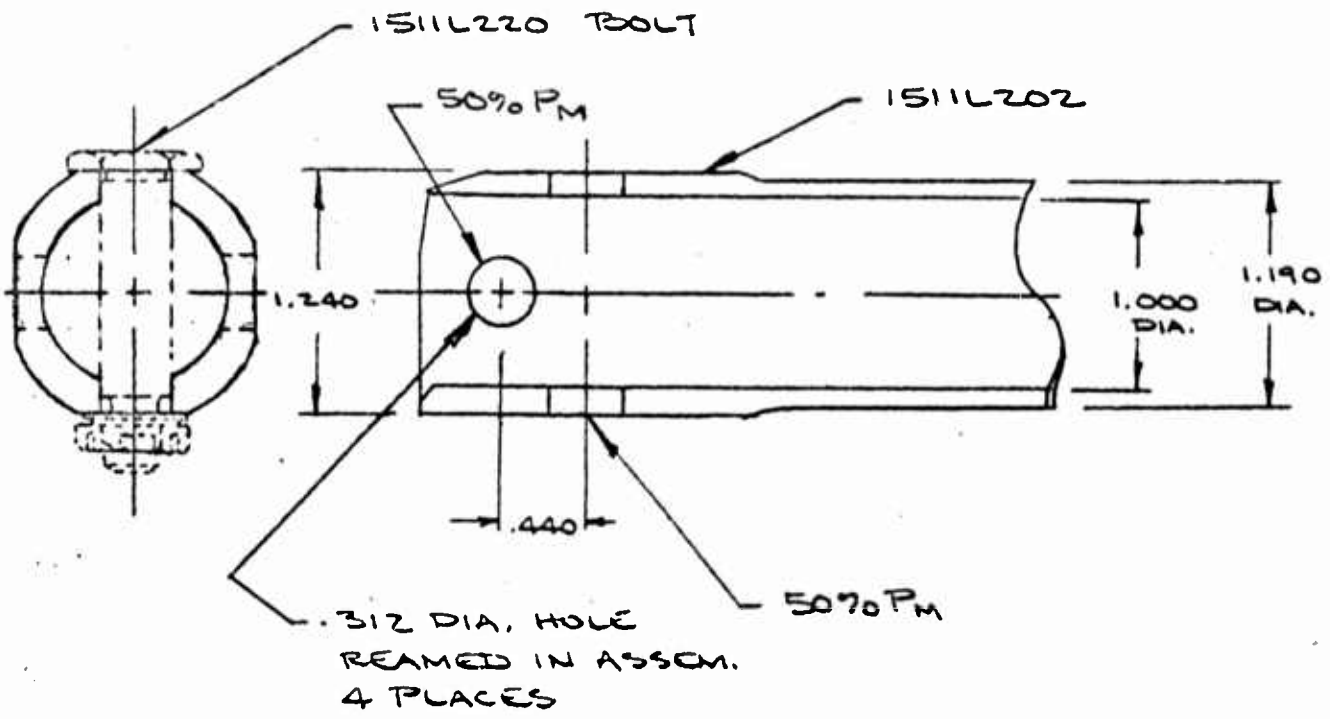

SPINUP (FWD) 9200# CRITICAL

$D^2 = 1.538$

$d^2 = 1.000$

$\Delta = .538$

$A = .7854\,(.538) = .4225$

$A_t = .4225 - 2(.312).120$

$= .3476$ IN.^{2}

$P_t = .50\,P_M = .50(6244) = 3122\#$ ▷1

$$f_{tu} = \frac{3122 \times 1.5}{.3476} = 13471 \text{ PSI}$$

$$M.S. = \frac{80000}{1.15 \times 13471} - 1 = \underline{+.17 \text{ LGE}}$$

▷1 REF. P. 249

CALC	Brahif		REVISED	DATE	NOSE GEAR XV5A	15111L
CHECK					DRAG BRACE ANALYSIS	RYAN
APR					H. W. LOUD MACHINE WORKS, INC. 867 EAST SECOND ST., POMONA, CALIFORNIA	PAGE 253
APR						

DRAG BRACE - UPPER (3111202) CONTD

SPRINGBACK (FWD) 9200# CRITICAL

$P_c = .50 P_M = .50 \times 6525 = 3263\#$ ▷1

$A_{br} = 2\left[.312(.120)\right] = .075 \text{ IN.}^2$

$F_{bru} = 96000 \text{ PSI}$ ◁2

$$f_{bru} = \frac{3263 \times 1.5}{.075} = 65267 \text{ PSI}$$

$$M.S. = \frac{96000}{1.15 \times 65267} - 1 = \underline{.28}$$

◁2 REF. 2 P. 114

▷1 REF. P. 248

CALC			REVISED	DATE
CHECK				
APR				
APR				

NOSE GEAR XV5A

DRAG BRACE ANALYSIS

H. W. LOUD MACHINE WORKS, INC.
887 East Second St., Pomona, California

1511L

RYAN

PAGE 254

BOLT - CROSS BEAM (1511L220)

SPRINGBACK (FWD) 9200# CRITICAL

MATL: 7075T6 ALUM. ALLOY PER QQ-A-282-1 COND. T6

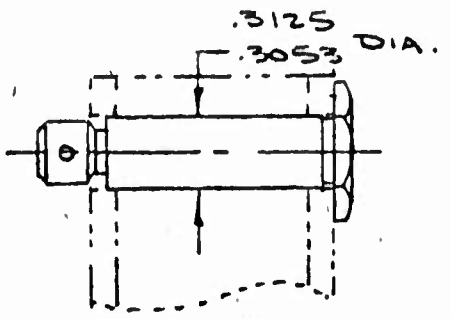

$P_M = 6525\#$ ▷1

$P_S = .50 \times 6525 = 3263\#$

$A_S = .7854\,(.3053)^2 = .0732\ \text{IN.}^2$

P.113 ALC-5

$F_{SU} = 46000\ \text{PSI}$ ◁2

$$f_{SU} = \frac{3263 \times 1.5}{2 \times .0732} = 33442\ \text{PSI}$$

$$M.S. = \frac{46000}{1.15 \times 33442} - 1 = \underline{\underline{.20}}$$

▷3

▷3 FITTING FACTOR

◁2 REF. 2 P. 113

▷1 REF. P. 248

CALC	[signature]		REVISED	DATE	NOSE GEAR XV5A	1511L
CHECK					BOLT ANALYSIS	RYAN
APR					H. W. LOUD MACHINE WORKS, INC. 887 EAST SECOND ST., POMONA, CALIFORNIA	PAGE 255
APR						

CROSSBEAM (1511L203)

FIG. XI

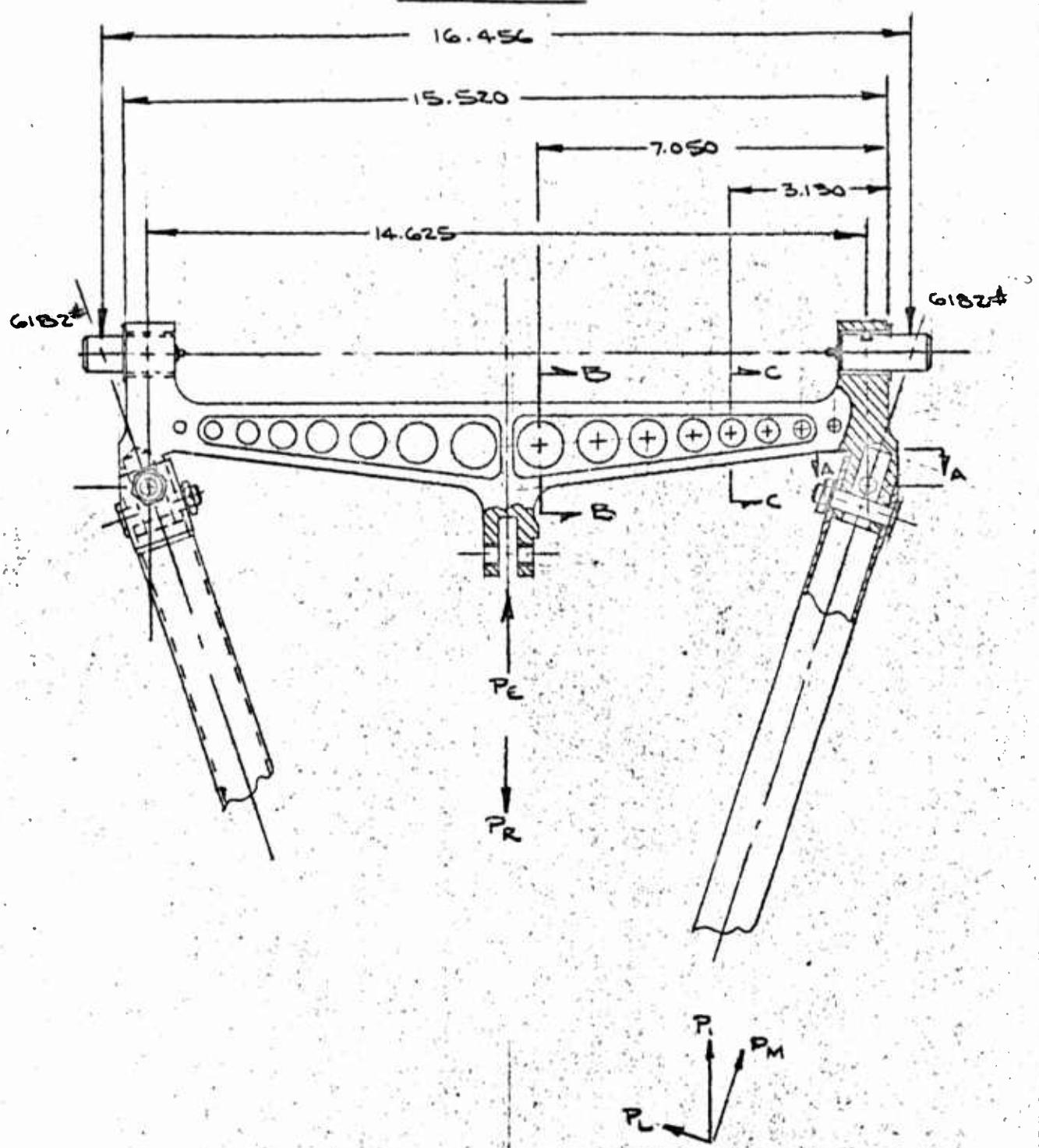

CALC	T. Bartlett		REVISED	DATE	NOSE GEAR XV5A	1511L
CHECK					CROSSBEAM ANALYSIS	RYAN
APR					H. W. LOUD MACHINE WORKS, INC. 887 EAST SECOND ST., POMONA, CALIFORNIA	PAGE 256
APR						

CROSSBEAM (1511L203)

TRUNNION LUG ANALYSIS

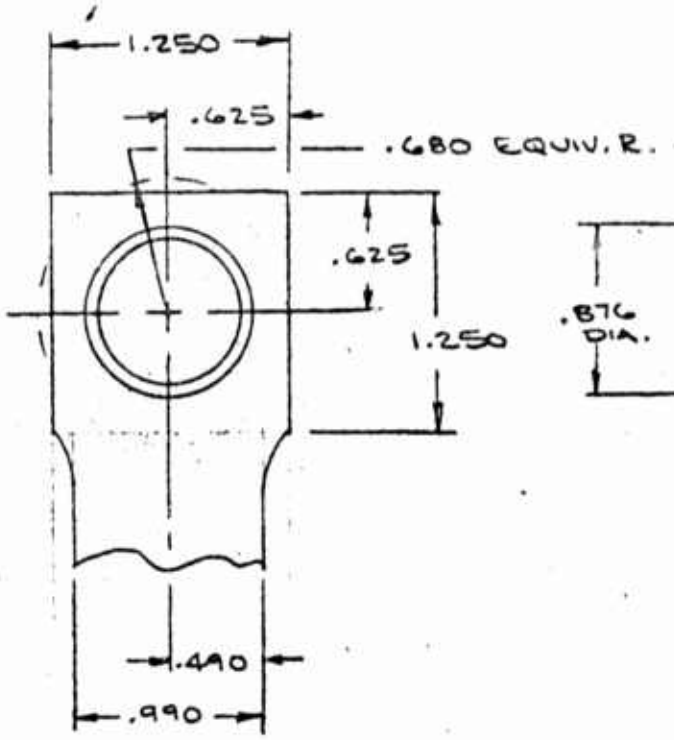

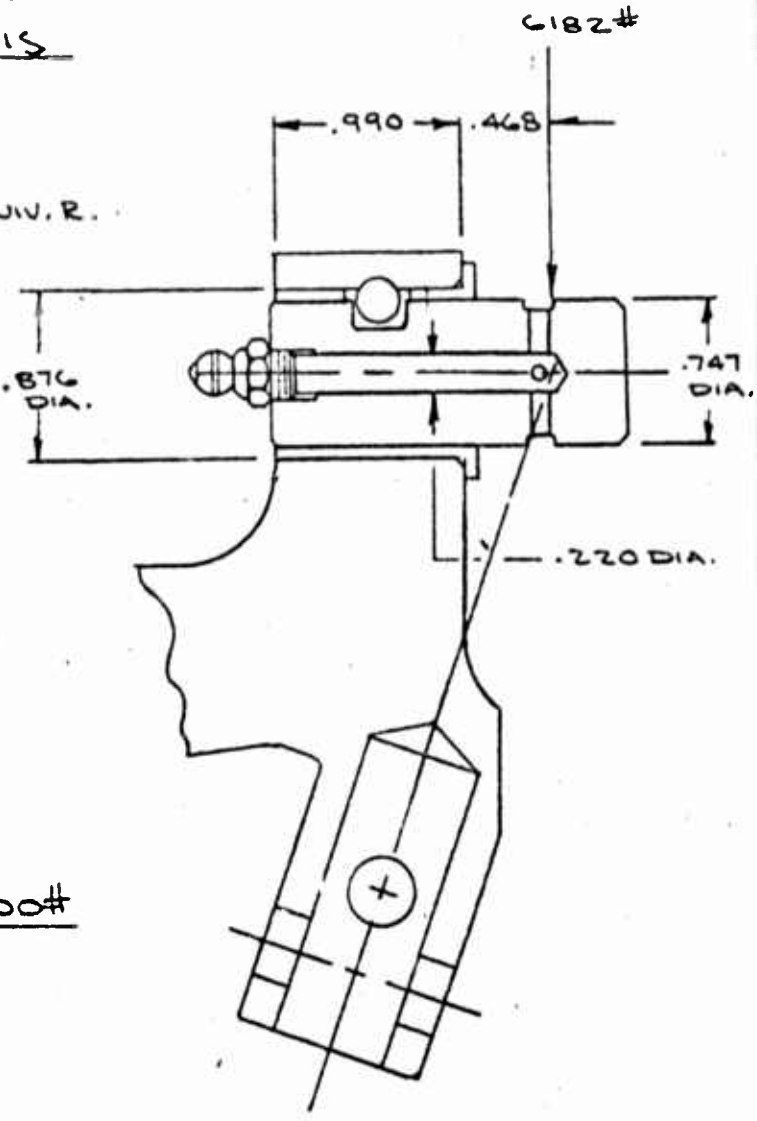

SPRINGBACK (FWD) 9200#

CRITICAL

SHEAR = 6182# [1]

$M = .468 \times 6182 = 2893$ IN.#

$\frac{M}{SL} = \frac{2893}{6182 \times .990} = .473$

$K_1 = 6.90$ $\qquad W_1 = \frac{K_1 S}{L} = \frac{6.9 \times 6182}{.990}$

$K_2 = 4.85$ $\qquad W_2 = \frac{K_2 S}{L} = \frac{4.85 \times 6182}{.990}$

$W_1 = 43087$

$W_2 = 30284$

[1] REF. P. 240

CALC	[signature]		REVISED	DATE	NOSE GEAR XV5A	1511L
CHECK					CROSSBEAM ANALYSIS	RYAN
APR					H. W. LOUD MACHINE WORKS, INC. 667 EAST SECOND ST., POMONA, CALIFORNIA	PAGE 257
APR						

CROSSBEAM - CONT'D

TRUNNION LUG ANALYSIS - CONT'D

BEARING LOAD DISTRIBUTION

$$B_{bv} = W_1 - \frac{W_1+W_2}{L}\,x = 43087 - \left(\frac{43087+30284}{.990}\right)x$$

$$= 43087 - 74112\,(x)$$

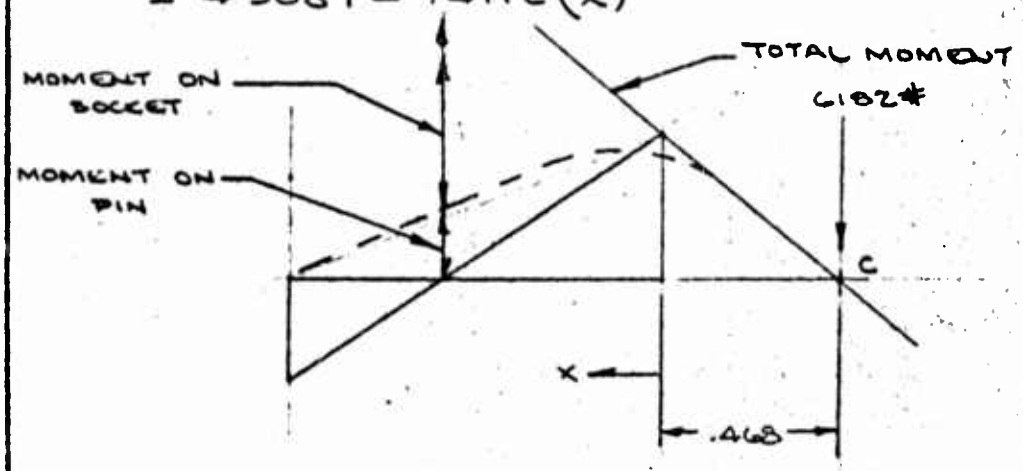

TOTAL MOMENT

$$M_T = (.468+x)\,6182 = 2893 + 6182\,x$$

MOMENT ON SOCKET

$$M_S = \iint B_{bv}\,dx\,dx = \iint (43087 - 74112x)\,dx\,dx$$

$$= \frac{43087\,(x^2)}{2} - \frac{74112\,(x)^3}{6} = 21544\,(x^2) - 12352\,(x^3)$$

MOMENT ON PIN

$$M_P = M_T - M_S$$

$$= 2893 + 6182\,(x) - \left[21544\,(x^2) - 12352\,(x^3)\right]$$

$$= 2893 + 6182\,(x) - 21544\,(x^2) + 12352\,(x^3)$$

CALC	[illegible]		REVISED	DATE
CHECK				
APR				
APR				

NOSE GEAR XV5A
CROSSBEAM ANALYSIS

H. W. LOUD MACHINE WORKS, INC.
887 EAST SECOND ST., POMONA, CALIFORNIA

151 L
RYAN
PAGE 258

CROSSBEAM

TRUNNION LUG ANALYSIS - CONT'D

M_{ϕ} = max. WHERE $\frac{dm_{\phi}}{dx} = 0$

$$\frac{dm_{\phi}}{dx} = 6182 - (21544x)2 + (12352x^2)3$$

$$= 6182 - 43088x + 37056x^2$$

$$x = + \frac{43088 \pm \sqrt{(43088)^2 - 4(37056)6182}}{2(37056)}$$

$$= \frac{43088 \pm \sqrt{9.4026 \times 10^8}}{74112} = \frac{43088 \pm 30664}{74112}$$

$$= \frac{12424}{74112} = .168$$

MAX. PIN BENDING FROM POINT 'C'

.168 + .468 = .636

SOCKET ANALYSIS - LAST 3/8 IN. OF SOCKET

$x = .990 - .375/2 = .802$ IN.

AVE. BEARING LOAD

$B_{br} = 43087 - 74112(.802) = -16351\#/IN.$

$a = .680$ $\quad a/D = .776$ $\quad K_{br} = .52$

$D = .876$ $\quad A_{br} = Dt = .3331 IN.^2$ $\quad K_t = .99$

$t = .38$ $\quad A_t = (W-D)t = .142 IN.^2$

$W = 1.250$

$W/D = 1.427$

CALC	Brodie		REVISED	DATE	NOSE GEAR XV5A CROSSBEAM ANALYSIS	1511L RYAN
CHECK						
APR						
APR					H. W. LOUD MACHINE WORKS, INC. 887 EAST SECOND ST., POMONA, CALIFORNIA	PAGE 259

CROSSBEAM

TRUNNION LUG ANALYSIS - CONT'D

$P_{br} = .38 \times 16351 = 6213\#$

$P'_{br} = K_{br} A_{br} F_{tux} = .52 \times .333 \times 70000 = 12110\#$

$$M.S. = \frac{12110}{1.15 \times 6213 \times 1.5} - 1 = .13$$

$P_{tu} = P_{br} = 6213\#$

$P'_{tu} = K_t A_t F_{tu} = .99 \times .142 \times 77000 = 10825\#$

$$M.S. = \frac{10825}{1.15 \times 6213 \times 1.5} - 1 = .01$$

MIDDLE OF SOCKET $.990/2 = .495$

$x = .495$

AVE BRG LOAD $= 43087 - 74112(.495) = 6402\#/IN.$ (26685)

$P_{br} = .25 \times 6402 = 1600\#$

$P'_{br} = 12110\#$

$$M.S. = \frac{12110}{1.15 \times 1600 \times 1.5} - 1 = +LOT$$

CALC			REVISED	DATE	NOSE GEAR XV5A	1511L
CHECK					CROSSBEAM ANALYSIS	RYAN
APR					H. W. LOUD MACHINE WORKS, INC. 637 EAST SECOND ST., POMONA, CALIFORNIA	PAGE 260
APR						

CROSSTBEAM

TRUNNION LUG ANALYSIS - CONT'D

$M_s = 21544\,(.495)^2 - 12352\,(.495)^3 = 3784$ IN.#

CONSERVATIVELY ASSUME A CYLINDRICAL TUBE

O.D. = 1.250	1.227	.1198
I.D. = .876	.602	.0289
$2t$ = .374	A = .625 IN.^{2}	I = .0909
t = .187		

$D/t = 6.68$ $\qquad F_{bu} = 103000$ PSI

$$f_{bu} = \frac{3784 \times 1.5 \times .625}{.0909} = 39028 \text{ PSI}$$

$$R_{bu} = \frac{39028}{103000} = .379$$

$$f_{sbr} = \frac{1600 \times 1.5}{.625} = 3840 \text{ PSI} \quad (1)$$

$$R_{sbr} = \frac{3840}{46000} = .083$$

$$M.S. = \frac{1}{.379 + .083} - 1 = 1.60$$

(1) REF. P. 260

CALC	Bracket		REVISED	DATE	NOSE GEAR XV5A	1511L
CHECK					CROSSTBEAM ANALYSIS	RYAN
APR					H. W. LOUD MACHINE WORKS, INC. 887 EAST SECOND ST., POMONA, CALIFORNIA	PAGE 261
APR						

CROSSBEAM

SECTION A-A SPRINGBACK (FWD) CRITICAL

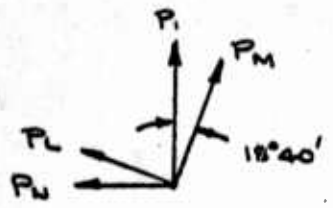

$P_1 = 6182\#$

$P_M = 6525\#$ (1)

$P_L = 1979\#$

$P_N = P_L / \cos 18°40' = 1979/.9474 = 2089\#$

$M_{A-A} = 1.125 \times 2089 = 2350$ IN.#

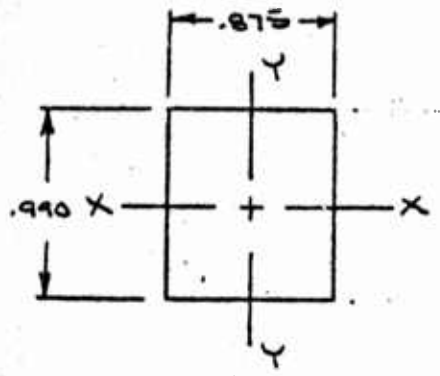

$A = .875 \times .990 = .8661$ IN.^{2}

SHEAR x = 2089 #

$I_{y-y} = \frac{.990 \times .875^3}{12} = .055$ IN.^{4}

$Q = .990 \times .438 \times .219 = .095$

$K = \frac{2 \times .095 \times .438}{.055} = 1.50$

$F_{bu} = \left(\frac{77}{74}\right) 105000 = 109200$ PSI (2)

$f_{by-y} = \frac{2089 \times .438 \times 1.5}{.055} = 24964$ PSI

$R_{by-y} = \frac{24964}{109200} = .229$

$f_{sx} = \frac{2089 \times .095 \times 1.5}{.055 \times .438} = 12356$ PSI

$R_{sx} = \frac{12356}{46000} = .281$

(2) REF. P. 314

(1) REF. P. 248

CALC			REVISED	DATE	NOSE GEAR XV5A	1511L
CHECK					CROSSBEAM ANALYSIS	RYAN
APR					H. W. LOUD MACHINE WORKS, INC. 807 EAST SECOND ST., POMONA, CALIFORNIA	PAGE 262
APR						

CROSSBEAM

SECTION A-A CONTD

$$f_c = \frac{6182 \times 1.5}{.866} = 10707 \text{ PSI}$$

$$R_c = \frac{10707}{66000} = .162$$

TENSILE BENDING, COMPRESSION & SHEAR

$$M.S. = \frac{1}{\left[(.229 - .162)^2 + (.281)^2\right]^{1/2}} - 1 = \underline{+1.66}$$

CALC	Bostick		REVISED	DATE
CHECK				
APR				
APR				

NOSE GEAR XV5A — 1511L

CROSSBEAM ANALYSIS — RYAN

H. W. LOUD MACHINE WORKS, INC.
887 EAST SECOND ST., POMONA, CALIFORNIA

PAGE 263

CROSSBEAM

MAX. BENDING IN CROSSBEAM IS DURING RETRACTION OF ACTUATOR

P_E = PRESS. PROOF $\times A_P$

$= 4500 \times 1.606 = 7227\#$

$$M_{MAX} = \frac{7227 \times 16.456}{4} = 29736 \text{ IN.\#}$$

$$M_{B\text{-}B} = \frac{7227}{2} \times (7.050 + .468) = 27170 \text{ IN.\#}$$

$$M_{C\text{-}C} = \frac{7227}{2} \times (3.130 + .468) = 13003 \text{ IN.\#}$$

CALC	[illegible]		REVISED	DATE
CHECK				
APR				
APR				

NOSE GEAR XV5A

CROSSBEAM ANALYSIS

H. W. LOUD MACHINE WORKS, INC.
887 EAST SECOND ST., POMONA, CALIFORNIA

1511L

RYAN

PAGE 264

CROSSBEAM

SECTION B-B (NEGLECT FILLETS)

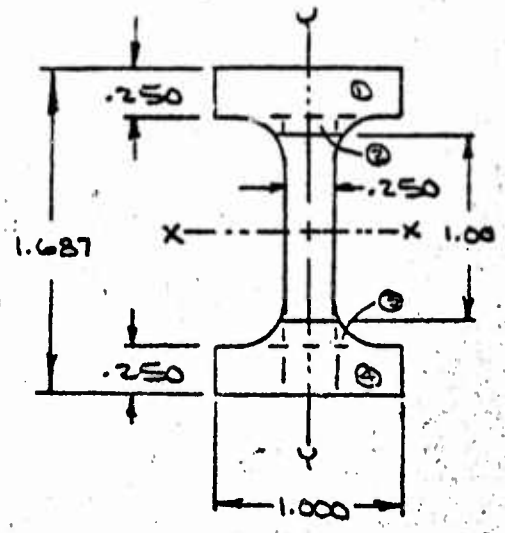

		A	Y	AY	AY^2	$I_{o\,x-x}$
1	1.00 X .250	.2500	1.562	.3905	.6100	.0013
2	.25 X .090	.0225	1.391	.0313	.0435	.0001
3	.25 X .09	.0225	.296	.0067	.0020	.0001
4	1.00 X .250	.2500	.125	.0310	.0039	.0013
	Σ	.5450		.4595	.6594	.0028

$$\bar{Y} = \frac{\Sigma AY}{\Sigma A} = \frac{.4595}{.5450} = .843$$

$$I_{x-x} = .6594 + .0028 - .843 \times .4595 = .275 \text{ IN.}^4$$

$$Q_{x-x} = .250 \times \overset{.180}{1.00} \times .718 + .09 \times \overset{.012}{.25} \times .547 = .192$$

$$K_{x-x} = \frac{2 \times .192 \times .843}{.275} = 1.176$$

$$F_{bu} = \left(\frac{77}{74}\right) 85000 = 88400 \text{ PSI}$$

1

1 REF. P. 314

CALC	[signature]		REVISED	DATE	NOSE GEAR XV5A	1511L
CHECK					CROSSBEAM ANALYSIS	RYAN
APR					H. W. LOUD MACHINE WORKS, INC. 887 EAST SECOND ST., POMONA, CALIFORNIA	PAGE 265
APR						

CROSSTBEAM

SECTION B-B CONT'D

$$f_{bu} = \frac{27170 \times .843}{.275} = 83276 \text{ PSI}$$

$$R_{bu} = \frac{83276}{88400} = .942$$

$$f_{su} = \frac{7227}{2 \times .545} = 6631 \text{ PSI}$$

$$R_{su} = \frac{6631}{46000} = .144$$

$$M.S. = \frac{1}{.942 + .144} - 1 = .05$$

CALC	Brooks		REVISED	DATE	NOSE GEAR XV5A	1511L
CHECK					CROSSBEAM ANALYSIS	RYAN
APR						
APR					H. W. LOUD MACHINE WORKS, INC. 887 EAST SECOND ST., POMONA, CALIFORNIA	PAGE 266

CROSSBEAM

SECTION C-C (NEGLECT FILLETS)

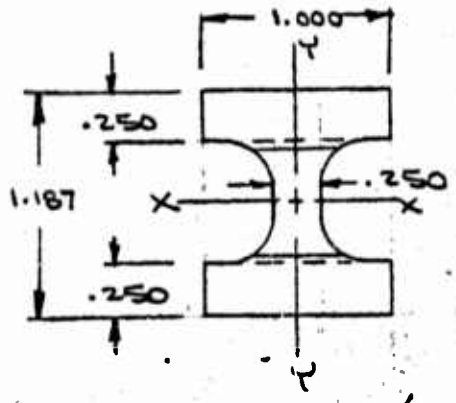

$A = 2(1.187 \times .250) = .594$

$I_{x-x} = 2 \times .250 \times 1.00 \times \left(\frac{1.187 - .250}{2}\right)^2 = .219 \text{ IN.}^4$

$Q_{x-x} = .250 \times 1.00 \times .468 = .117$

$K_{x-x} = \frac{2 \times .117 \times .593}{.219} = .63$ USE $K = 1$

$\therefore F_{bu} = \left(\frac{77}{74}\right) 74000 \text{ (1)} = 76960 \text{ PSI}$

$M_{c-c} = 13003 \text{ IN.\#}$

$f_{bu} = \frac{13003 \times .593}{.219} = 35208 \text{ PSI}$

$R_{bu} = \frac{35208}{76960} = \underline{.457}$

$M.S. = \frac{1}{.457} - 1 = \underline{1.12}$

(1) REF. P. 314

CALC	[signature]		REVISED	DATE	NOSE GEAR XV5A	1511L
CHECK					CROSSBEAM ANALYSIS	RYAN
APR					H. W. LOUD MACHINE WORKS, INC. 887 EAST SECOND ST., POMONA, CALIFORNIA	PAGE 267
APR						

PIN - TRUNNION (1511L204)

MATL: 7075T6 ALUM. AL. PER QQ-A-277

$$M_{MAX} = 2893 + 6182(.168) - 21544(.168)^2 + 12352(.168)^3$$

$$= 2893 + 1039 - 603 + 58$$

$$= 3271 \text{ IN.\#}$$

O.D. = .747 (.3735)	.438	.0153
I.D. = .220 (.110)	.038	.0001
$2t$ = .527	A = .400 IN.^{2}	I = .0152 IN.^{4}
t = .264		

F_{su} = 46000 PSI

D/t = 2.85

$F_{bu} = \left(\frac{80}{74}\right) 114000 = 123234$ PSI ▷1

$$f_{bu} = \frac{3271 \times .3735 \times 1.5}{.0152} = 120563 \text{ PSI}$$

$$M.S. = \frac{123234}{120563} - 1 = .02$$

AT SHEAR FACE

$M = .468 \times 6182 = 2893$ IN.#

A = .400 IN.^{2}

$$f_{bu} = \frac{2893 \times .3735 \times 1.5}{.0152} = 106630$$

$$R_{bu} = \frac{106630}{125510} = .850$$

$$f_{su} = \frac{6182 \times 1.5}{.400} = 23183 \text{ PSI}$$

$$R_{su} = \frac{23183}{46000} = .504$$

$$M.S. = \frac{1}{.850 + .504} - 1 = .01$$

▷1 REF. P. 314

CALC	Bartlett		REVISED	DATE	NOSE GEAR XV5A PIN ANALYSIS	1511L
CHECK						RYAN
APR					H. W. LOUD MACHINE WORKS, INC. 887 EAST SECOND ST., POMONA, CALIFORNIA	PAGE 268
APR						

SECTION B

1. AXLE (1511L130)

MATL: 4340 STEEL PER MIL-S-5000

F_{tu} = 180000 PSI

F_{su} = 109000 PSI

F_{bu} = F_b vs D/t OR F_b vs K

△1

2. SUPPORT (1511L129)

MATL: 2024 T4 ALUM. ALLOY PER QQ-A-268

F_{tu} = 62000 PSI

F_{su} = 37000 PSI

◁2

◁2 REF. 2 P. 83

△1 REF. 2 P. 28

CALC			REVISED	DATE
CHECK				
APR				
APR				

NOSE GEAR XV5A

1511L

RYAN

H. W. LOUD MACHINE WORKS, INC.
887 EAST SECOND ST., POMONA, CALIFORNIA

PAGE 269

AXLE (15111L130)

CRITICAL LOAD DETERMINATION

FIG. XII

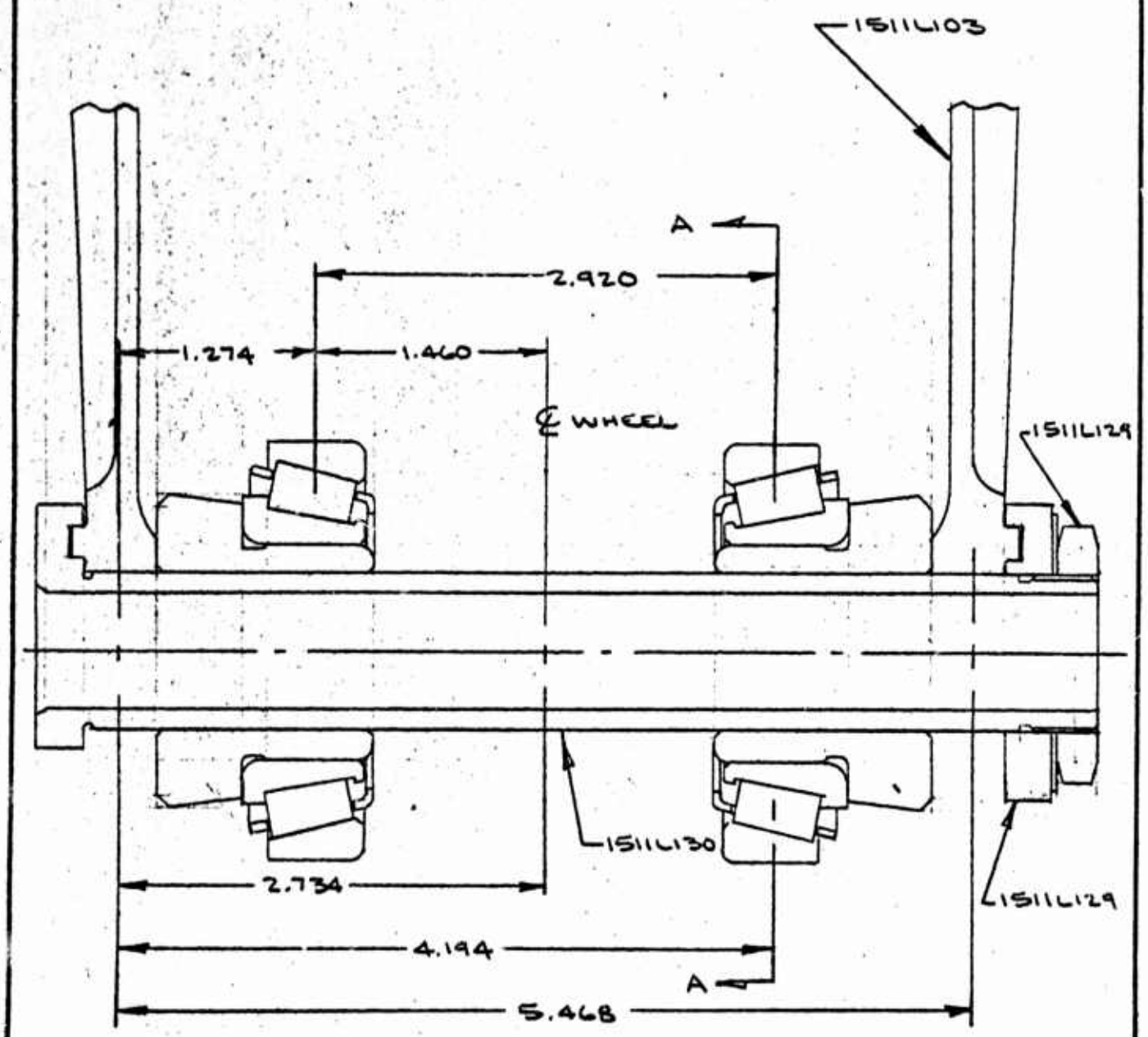

CALC			REVISED	DATE	NOSE GEAR XV5A	15111L
CHECK					AXLE	RYAN
APR					H. W. LOUD MACHINE WORKS, INC. 887 EAST SECOND ST., POMONA, CALIFORNIA	PAGE 270
APR						

AXLE

CRITICAL LOAD DETERMINATION

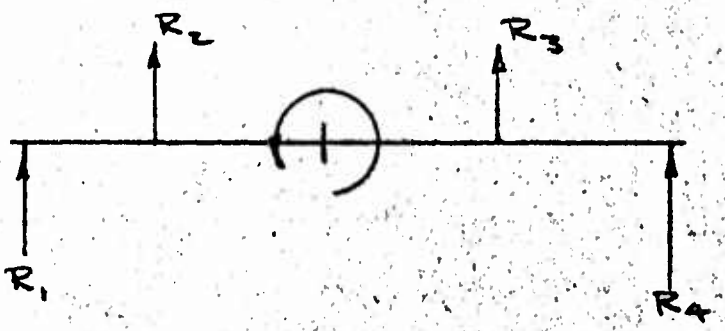

$\Sigma M_{V_3} = 0$

$$-2.920\, R_{V_2} - 1.46\,V + 7.9\,S = 0$$

$$R_{V_2} = \frac{-1.46V + 7.9S}{2.920} = -.50V + 2.705S$$

$\Sigma M_{V_2} = 0$

$$2.920\, R_{V_3} + 1.460\,V + 7.9\,S = 0$$

$$R_{V_3} = \frac{-1.460V - 7.9S = 0}{2.920} = -.50V - 2.705S$$

CALC	[illegible]		REVISED	DATE	NOSE GEAR XV5A	1511L
CHECK					AXLE	RYAN
APR					H. W. LOUD MACHINE WORKS, INC. 887 EAST SECOND ST., POMONA, CALIFORNIA	PAGE 271
APR						

AXLE

CRITICAL LOAD DETERMINATION - CONT'D

$\Sigma M_{V_1} = 0$

$$5.468\ R_{V_4} + 4.194\ R_{V_3} + 1.274\ R_{V_2} = 0$$

$$R_{V_4} = \frac{-4.194\ R_{V_3} - 1.274\ R_{V_2}}{5.468}$$

$$= -.767\ R_{V_2} - .233\ R_{V_1}$$

$$R_{V_4} = -.767(-.500V - 2.705S) - .233(-.500V + 2.705S)$$

$$= .384V + 2.075S + .117V - .630S$$

$$= .501V + 1.445S$$

$\Sigma M_{V_4} = 0$

$$-5.468\ R_{V_1} - 4.194\ R_{V_2} - 1.274\ R_{V_3} = 0$$

$$R_{V_1} = \frac{-4.194\ R_{V_2} - 1.274\ R_{V_3}}{5.468}$$

$$= -.767\ R_{V_2} - .233\ R_{V_3}$$

$$R_{V_1} = -.767(-.500V + 2.705S) - .233(-.500V - 2.705S)$$

$$= .384V - 2.075S + .117V + .630S$$

$$= .501V - 1.445S$$

CALC	Barbuit		REVISED	DATE	NOSE GEAR XV5A AXLE	1511L
CHECK						RYAN
APR					H. W. LOUD MACHINE WORKS, INC. 607 EAST SECOND ST., POMONA, CALIFORNIA	PAGE 272
APR						

AXLE

CRITICAL LOAD DETERMINATION - CONTD

SPRINGBACK F.E. -1.6 (FWD) 9200#

$R_1 = -.50 \times 6205 \rightarrow -4441/2 = 3816\#$

$R_2 = -.50 \times 6205 \rightarrow -4441/2 = 3816\#$

MAX. VERTICAL F.E. -1.6 (FWD) 9200#

$R_1 = -.50 \times 6342 \rightarrow 1009/2 = 3211\#$

$R_2 = -.50 \times 6342 \rightarrow 1009/2 = 3211\#$

VTOL F.E. -1.6 (AFT) MAX. VERTICAL 9200# EMERG.

$R_1 = -.50 \times 8448 \rightarrow -739/2 = 4240\#$

$R_2 = -.50 \times 8448 \rightarrow -739/2 = 4240\#$

UNSYMM. BRAKING F.E. -5.3 (FWD) 12500#

$R_1 = -.50 \times 4876 + 2.705 \times 1105 \rightarrow -427/2$

$= 592\#$

$R_2 = -.50 \times 4876 - 2.705 \times 1105 \rightarrow -427/2$

$= 5431\#$

TURNING F.E. -5.3 (FWD) 12500#

$R_1 = -.50 \times 3193 + 2.705 \times 1602 \rightarrow -279/2$

$= 2740\#$

$R_2 = -.50 \times 3193 - 2.705 \times 1602 \rightarrow -279/2$

$= -5932\#$

CALC	[illegible]		REVISED	DATE	NOSE GEAR XV5A	1511L
CHECK					AXLE	RVAN
APR					H. W. LOUD MACHINE WORKS, INC. 887 EAST SECOND ST., POMONA, CALIFORNIA	PAGE 273
APR						

AXLE

CRITICAL LOAD DETERMINATION CONT'D

TURNING (FWD) 12500# CRITICAL

$R_{V_1} = .501V - 1.445S$

$= .501 \times 3193 - 1.445 \times 1602$

$= -715\#$

$R_{V_2} = -.500V + 2.705S$

$= -.500 \times 3193 + 2.705 \times 1602$

$= 2736\#$

$R_{V_3} = -.500V - 2.705S$

$= -.500 \times 3193 - 2.705 \times 1602$

$= -5930\#$

$R_{V_4} = .501V + 1.445S$

$= .501 \times 3193 + 1.445 \times 1602$

$= 3915\#$

CALC	Burchett		REVISED	DATE
CHECK				
APR				
APR				

NOSE GEAR XVSA

AXLE

H. W. LOUD MACHINE WORKS, INC.
887 EAST SECOND ST., POMONA, CALIFORNIA

1511L

RYAN

PAGE 274

AXLE

CRITICAL LOAD DETERMINATION - CONT'D

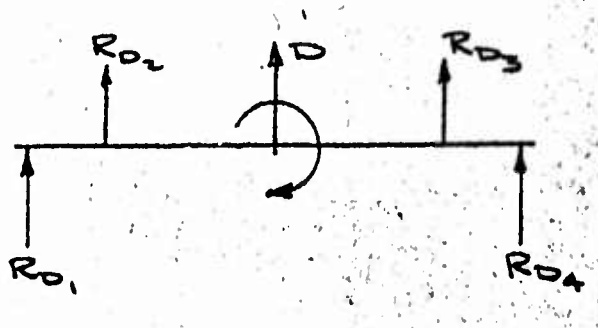

$\Sigma M_{D_3} = 0$

$$2.920\, R_{D_2} + 1.460\, D = 0$$

$$R_{D_2} = \frac{-1.460\, D}{2.920} = -.500\, D$$

$\Sigma M_{D_2} = 0$

$$-2.920\, R_{D_3} - 1.460\, D = 0$$

$$R_{D_3} = \frac{-1.460\, D}{2.920} = -.500\, D$$

$\Sigma M_{D_4} = 0$

$$5.468\, R_{D_1} + 4.194\, R_{D_2} + 1.274\, R_{D_3} = 0$$

$$R_{D_1} = \frac{-4.194\, R_{D_2} - 1.274\, R_{D_3}}{5.468}$$

$$= -.767\, R_{D_2} - .233\, R_{D_3}$$

$$R_{D_1} = -.767\,(-.500\, D) - .233\,(-.500\, D)$$

$$= .384\, D + .117\, D$$

$$= .501\, D$$

CALC	Bartlett		REVISED	DATE	NOSE GEAR XV5A	1511L
CHECK					AXLE	RYAN
APR					H. W. LOUD MACHINE WORKS, INC. 887 EAST SECOND ST., POMONA, CALIFORNIA	PAGE 275
APR						

AXLE

CRITICAL LOAD DETERMINATION - CONT'D

$\Sigma M_{D_1} = 0$

$$-5.468\, R_{D_4} - 4.194\, R_{D_3} - 1.274\, R_{D_2} = 0$$

$$R_{D_4} = \frac{-4.194\, R_{D_3} - 1.274\, R_{D_2}}{5.468}$$

$$= -.767\, R_{D_3} - .233\, R_{D_2}$$

$$R_{D_4} = -.767\,(-.500\, D) - .233\,(-.500\, D)$$

$$= .501\, D$$

CALC	Bradish		REVISED	DATE	NOSE GEAR XV5A	1511L
CHECK					AXLE	RYAN
APR					H. W. LOUD MACHINE WORKS, INC. 887 EAST SECOND ST., POMONA, CALIFORNIA	PAGE 276
APR						

AXLE

CRITICAL LOAD DETERMINATION - CONT'D

TURNING (FWD) 12500# - CONT'D

$R_{D_1} = .501\ D = .501\ (-279) = -140\#$

$R_{D_2} = -.500\ D = -.500\ (-279) = 140\#$

$R_{D_3} = -.500 D = -.500\ (-279) = 140\#$

$R_{D_4} = .501\ D = .501\ (-279) = -140\#$

SUMMARY

$R_1 = R_{V_1} \mapsto R_{D_1} = -715 \mapsto -140 = 729\#$

$R_2 = R_{V_2} \mapsto R_{D_2} = 2736 \mapsto 140 = 2740\#$

$R_3 = R_{V_3} \mapsto R_{D_3} = -5930 \mapsto 140 = -5932\#$

$R_4 = R_{V_4} \mapsto R_{D_4} = 3915 \mapsto -140 = 3918\#$

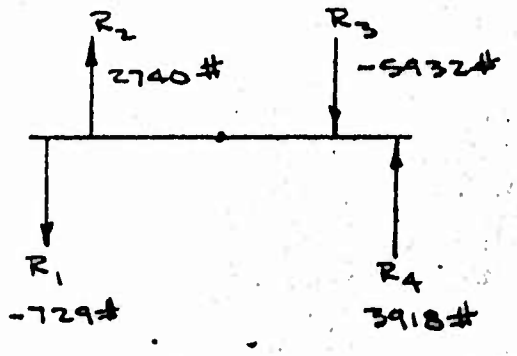

B.M. @ R_2 = 729 X 1.274 = 929 IN.#

B.M. @ R_3 = 3918 X 1.274 = 4992 IN.#

CALC	[signature]		REVISED	DATE	NOSE GEAR XV5A	1511L
CHECK					AXLE	RYAN
APR					H. W. LOUD MACHINE WORKS, INC. 887 EAST SECOND ST., POMONA, CALIFORNIA	PAGE 277
APR						

AXLE (1511L130)

TURNING (FWD) 12500# CRITICAL

SECTION A-A

M = 4992 IN.# ▷1

O.D. = .9938 (.4969)	.7757		.0479
I.D. = .7600 (.3800)	.4536		.0164
2t = .2338	A = .3221 IN.²		I = .0315 IN.⁴
t = .1169 IN.			

D/t = 8.5 F_{bu} = 256000 PSI ◁2

$$f_{bu} = \frac{4992 \times .4969 \times 1.5}{.0315} = 118126 \text{ PSI}$$

$$M.S. = \frac{180000}{118126} - 1 = \underline{.52}$$

$$f_{s_{MAX}} = \frac{2 \times 5932 \times 1.5}{.3221} = 55251 \text{ PSI}$$

$$M.S. = \frac{109000}{55251} - 1 = \underline{.97}$$

▷1 REF. P. 277

◁2 REF. P. 316

CALC	Butchi		REVISED	DATE	NOSE GEAR XV5A	1511L
CHECK					AXLE ANALYSIS	RYAN
APR					H. W LOUD MACHINE WORKS, INC. 887 EAST SECOND ST., POMONA, CALIFORNIA	PAGE 278
APR						

AXLE - CONT'D

TENSION AT RELIEF DIA.

$A_t = .7854(.970^2 - .760^2) = .285 \text{ IN.}^2$

$$f_{tu} = \frac{.50 \times 1602 \times 1.5}{.285} = 4216 \text{ PSI}$$

$$M.S. = \frac{180000}{4216} - 1 = \underline{+\text{LGE}}$$

TENSION AT THD RELIEF

$A_t = .7854(.896^2 - .760^2) = .177 \text{ IN.}^2$

$$f_{tu} = \frac{.50 \times 1602 \times 1.5}{.177} = 6788 \text{ PSI}$$

$$M.S. = \frac{180000}{6788} - 1 = \underline{+\text{LGE}}$$

CALC	Burchett		REVISED	DATE	NOSE GEAR XV5A	1511L
CHECK					AXLE ANALYSIS	RYAN
APR						
APR					H. W. LOUD MACHINE WORKS, INC. 887 EAST SECOND ST., POMONA, CALIFORNIA	PAGE 279

AXLE

TURNING (FWD) 12500# CRITICAL

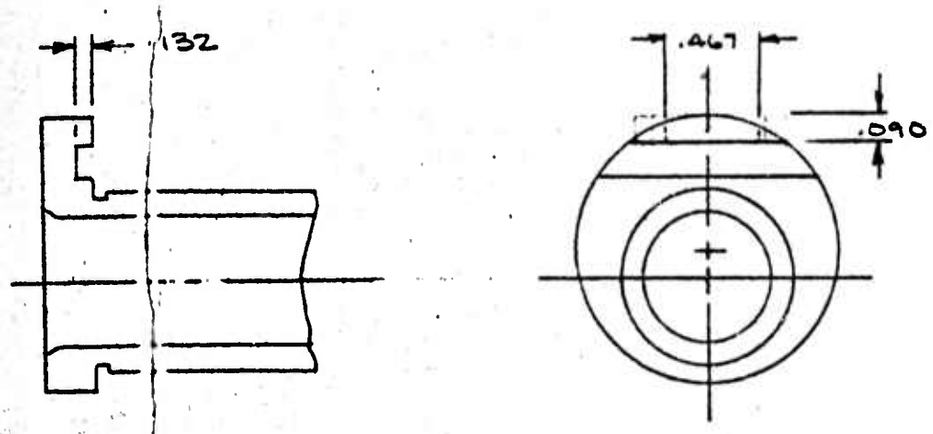

$M = S_0 \times R. = 1602 \times 7.9 = 12656$ IN.#.

$A_s = \frac{R_i^2}{2}(\alpha - \sin 2\alpha) = \frac{.735^2}{2}\left(\frac{57\pi}{180} - \sin 57°\right)$

$= .27($ $(.995 - .839) = .042$ IN.^{2}

$= .4($ $\times .090 = .042$ IN.^{2}

$\frac{h}{r} = \frac{.090}{.735} = .122$

$\theta = 57°$

$P_s =$ $\frac{656}{3.468} = 2315$ #

$f_{su} =$ $\frac{.315 \times 1.5}{.042} = 82680$ PSI

$M.S. = \frac{109000}{82680} - 1 = .32$

CALC	[illegible]		REVISED	DATE	NOSE GEAR XV5A — 1511L
CHECK					AXLE ANALYSIS — RYAN
APR					H. W. LOUD MACHINE WORKS, INC. 887 EAST SECOND ST., POMONA, CALIFORNIA — PAGE 280
APR					

SUPPORT - AXLE (1511L129)

$M = 12656$ IN.#

$P_s = 2315$ #

(1)

$\frac{h}{r} = \frac{.147}{.932} = .158$

$\alpha \approx 66°$

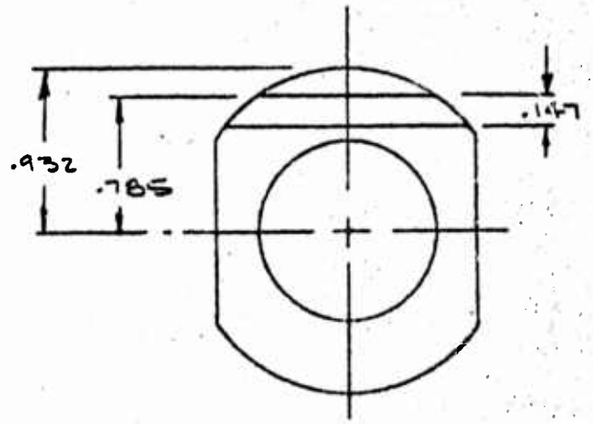

$$A_s = \frac{.932^2}{2}\left(\frac{66\pi}{180} - .9135\right) = .103 \text{ IN.}^2$$

$$f_{su} = \frac{2315 \times 1.5}{.103} = 33713 \text{ PSI}$$

$$M.S. = \frac{37000}{33713} - 1 = \underline{.10}$$

(1) REF. P. 280

CALC			REVISED	DATE	NOSE GEAR XV5A SUPPORT ANALYSIS	1511L
CHECK						RYAN
APR					H. W. LOUD MACHINE WORKS, INC. 87 EAST SECOND ST., POMONA, CALIFORNIA	PAGE 281
APR						

SECTION 9

INTERNAL COMPONENTS

1. PISTON HEAD (1511L124)

MATL: 7075 T6 ALUM. AL. PER Q-Q-A-282/277.

F_{tu} = 80000 PSI

F_{su} = 44000 PSI

1

2. CAM-LOWER (1511L123)

MATL: 7075 T6 ALUM. AL.

F_{tu} = 80000 PSI

F_{su} = 44000 PSI

1

3. BEARING ADAPTER (1511L121)

MATL: 2024 T4 ALUM. AL. PER QQ-A-268/267

F_{tu} = 70000 PSI

F_{su} = 38000 PSI

2

4. ORIFICE SUPPORT TUBE (1511L126)

MATL: 2024 T4 ALUM. AL. PER QQ-A-267

F_{tu} = 70000 PSI

F_{su} = 38000 PSI

F_{cy} = 50000 PSI

2

5. GLAND NUT (1511L127)

MATL: 2024 T4 ALUM. AL. PER QQ-A-267

F_{tu} = 70000 PSI

F_{su} = 38000 PSI

2

CALC			REVISED	DATE	NOSE GEAR XV5A	1511L
CHECK						RYAN
APR						
APR					H. W. LOUD MACHINE WORKS, INC. 887 EAST SECOND ST., POMONA, CALIFORNIA	PAGE 282

SECTION 9 CONT'D

6. PIN - METERING (1511L125)

MATL: 2024 T4 ALUM. AL. PER QQ-A-267

F_{tu} = 70000 PSI <2>

F_{su} = 38000 PSI

<1> REF. 2 P. 114

<2> REF. 2 P. 82

CALC	Goodrich		REVISED	DATE	NOSE GEAR XV5A	1511L
CHECK						RYAN
APR					H. W. LOUD MACHINE WORKS, INC. 887 EAST SECOND ST., POMONA, CALIFORNIA	PAGE 283
APR						

AIR PRESSURE CALCULATIONS

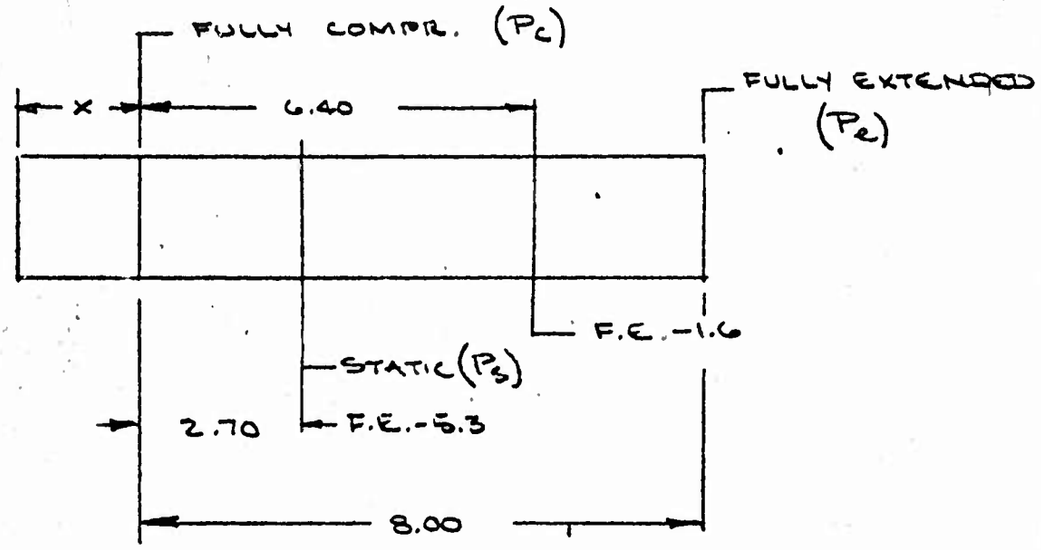

$P_1V_1 = P_2V_2$

$(X + 2.70)(1) = 4(X)$

$X = \frac{2.70}{3} = .90$

COMPRESSION RATIO
4 : 1

$\cos\alpha = .996$

$A_e = 4.897$ IN.^{2}

$(2.70 + .90)P_s = (8.00 + .90)P_e$

$P_e = \frac{(2.70 + .90)P_s}{(8.00 + .90)} = .404\,P_s$

STATIC WHEEL LOAD = 1966#

STATIC OLEO LOAD = 1966/.996 = 1974#

STATIC AIR PRESS. = 1974/4.897 = 403 PSIG

= 418 PSIA

CALC	Barthi		REVISED	DATE	NOSE GEAR XV5A	1511L
CHECK						RYAN
APR						
APR					H. W. LOUD MACHINE WORKS, INC. 887 EAST SECOND ST., POMONA, CALIFORNIA	PAGE 284

AIR PRESSURE CALCULATIONS - CONT'D

$P_c = .404 \times 418. = 169$ PSIA

$(2.70 + .90) P_s = .90\ P_c$

$P_c = \frac{3.60 \times 418}{.90} = 1672$ PSIA.

FOR F.E - 5.3 (STATIC) (CHECK)

$P_c V_c = P_s V_s$

$P_s = \frac{1672 \times 4.407}{17.629}$

$P_s = 418$ PSIA.

$V_c = 4.897 \times .90 = 4.407$ IN.^{3}

$V_s = 4.897 \times (2.70 + .90)$
$= 17.629$ IN.^{3}

$V_{1.6} = 4.897 \times (.90 + 6.40)$
$= 35.748$ IN.^{3}

FOR F.E. -1.6

$P_c V_c = P_{1.6} V_{1.6}$

$P_{1.6} = \frac{1672 \times 4.407}{35.748} = 206$ PSIA.

FOR TURNING (FWD) 9200#

STATIC WHEEL LOAD = 3193#
STATIC OLEO LOAD = 3193/.996 = 3206#
STATIC AIR PRESS. = 3206/4.897 = 655 PSIG
= 670 PSIA

$P_c V_c = P_s V_s$

$\frac{418 \times 4.407}{670} = \Delta V_s = 2.746$ IN.^{3} $\therefore V_s = 17.629 - 2.746$
$= 14.883$

$\Delta L = 2.746 / 4.897 = .561$ IN.

CALC	Bolin		REVISED	DATE	NOSE GEAR XVSA	1511L
CHECK						RYAN
APR						
APR					H. W. LOUD MACHINE WORKS, INC. 857 EAST SECOND ST., POMONA, CALIFORNIA	PAGE 285

PISTON HEAD (1511L124)

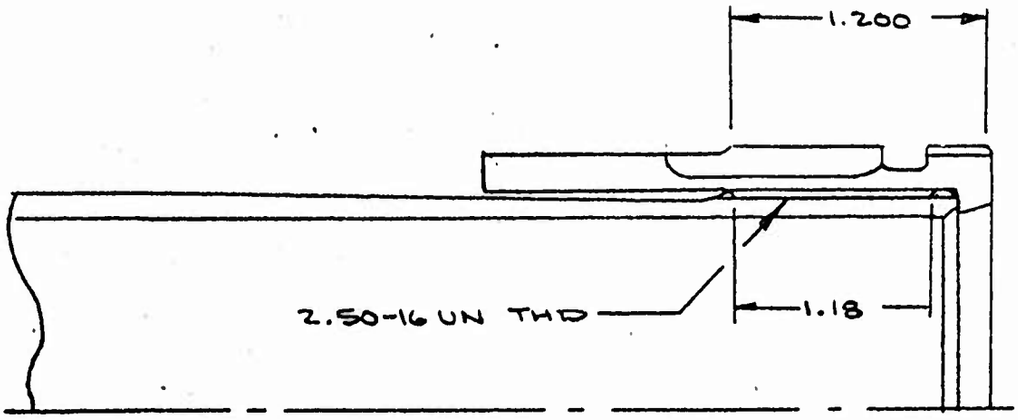

P_{AXIAL} = 3.0 X EXTENDED AIR PRESSURE X AREA OF CYL. SEAL

$PRESS._{EXT.}$ = 169 PSIA = 154 PSIG ▷1

$A_{CYL.\ SEAL}$ = 4.897 IN.^{2}

P_{AXIAL} = 3.0 X 154 X 4.897 = 2262 #

THDS IN SHEAR DUE TO P_{AXIAL}

PITCH DIA. OF 2.50-16UN-3B THD = 2.4594/2.4648

$$A_S = \frac{\pi d l}{2} = \frac{3.14 \times 2.4594 \times 1.18}{2} = 4.556 \text{ IN.}^2$$

$$f_S = \frac{2262 \times 1.5}{4.556} = 744 \text{ PSI} \qquad M.S.' = \frac{44000}{744} - 1 = \underline{\underline{+LGE}}$$

▷1 REF. P. 285

CALC	[illegible]		REVISED	DATE	NOSE GEAR XV5A	1511L
CHECK					PISTON HEAD ANALYSIS	RYAN
APR					H. W. LOUD MACHINE WORKS, INC. 887 EAST SECOND ST., POMONA, CALIFORNIA	PAGE 286
APR						

PISTON HEAD - CONT'D

ASSUME LOSS OF FLUID & PISTON HEAD LOADED AGAINST CYL. FACE.

VTOL (AFT) MAX. VERTICAL - CRITICAL CONDITION

$V_o = 8448\#$ ▷1

$$f_s = \frac{8448 \times 1.5}{4.897} = 2588 \text{ PSI}$$

$$M.S. = \frac{44000}{2588} - 1 = \underline{+\text{LGE}}$$

BEARING ON CYL. (1511L10A)

$A_{br} = \pi d L$ $\quad L = 1.490 - .260 - .030 = 1.200 \text{ IN.}$

$A_{br} = 3.14 \times 2.995 \times 1.200 = 11.285 \text{ IN.}^2$

COND. SPINUP F.E.-1.6 (FWD) 9200# CRITICAL

$R_{DUB} = 11342\#$ ◁2

$R_{SUB} = 0$ $\quad F_{bry} = 6000 \text{ PSI}$ ▷3

$$f_{br} = \frac{11342 \times 1.5}{11.285} = 1507 \text{ PSI}$$

$$M.S. = \frac{6000}{1507} - 1 = \underline{+\text{LGE}}$$

◁2 REF. P. 145

▷1 REF. P. 30

▷3 REF. MIL-S-8552A

CALC	Brooks		REVISED	DATE	NOSE GEAR XY5A	1511L
CHECK					PISTON HEAD ANALYSIS	RYAN
APR					H. W. LOUD MACHINE WORKS, INC. 887 EAST SECOND ST., POMONA, CALIFORNIA	PAGE 287
APR						

CAM - LOWER (1511L123)

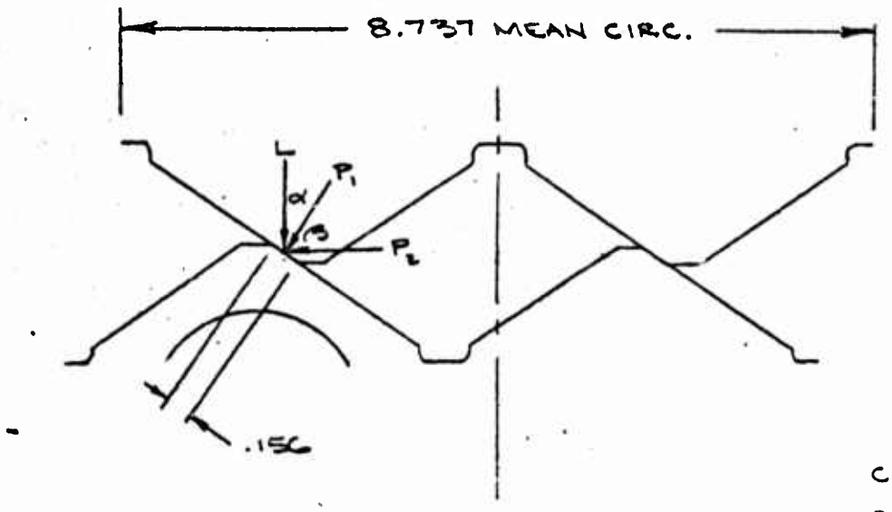

$\alpha = 34°29'$

$\beta = 55°31'$

$\cos\alpha = .8243$

$\cos\beta = .5662$

L = 3.0 X EXTENDED AIR PRESSURE X A_p

= 3.0 X 154 X 4.897 = 2262 #

$P_1 = \frac{L}{\cos\alpha} = \frac{2262}{.8243} = 2744\#$

$P_2 = P_1 \cos\beta = 2744 \times .5662 = 1554\#$

LOAD APPLIED ON MEAN DIA:

$\frac{8.737}{3.14} = 2.782$

$T = P_2\left(\frac{2.782}{2}\right) = 1554 \times 1.391 = 2162$ IN. #

CAM WALL THICKNESS = $\frac{2.997 - 2.563}{2} = .217$

TOTAL $A_{br} = 2(.156).217 = .068$ IN.^{2}

CALC	Gottlieb		REVISED	DATE	NOSE GEAR XV5A	1511L
CHECK					CAM ANALYSIS	RYAN
APR					H. W. LOUD MACHINE WORKS, INC. 807 EAST SECOND ST., POMONA, CALIFORNIA	PAGE 288
APR						

CAM - LOWER CONTD

$F_{bry} = 105000 PSI$ (1)

$$f_{bry} = \frac{2744 \times 1.5}{.068 \times 1.5} = 40353 PSI$$

$$M.S. = \frac{105000}{2 \times 40353} - 1 = .30$$ (2)

KEY (1511L148)

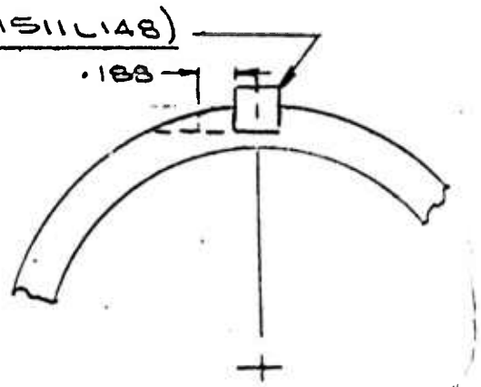

$A_s = (.970 - .250) \times .188 = .135 IN.^2$

$T = 2162 IN.\#$

$P_2 = 1554\#$ (3)

$$f_s = \frac{1554 \times 1.5}{.135} = 17267 PSI$$

$$M.S. = \frac{44000}{17267} - 1 = 1.55$$

(3) REF. P. 288

(2) BEARING FACTOR

(1) REF. P. 114

CALC	[illegible]		REVISED	DATE	NOS GEAR XYSA	1511L
CHECK					CAM ANALYSIS	RYAN
APR					H. W. LAND MACHINE WORKS, INC. 887 EAST [illegible]OND ST., POMONA, CALIFORNIA	PAGE 289
APR						

BEARING ADAPTER (1511L121)

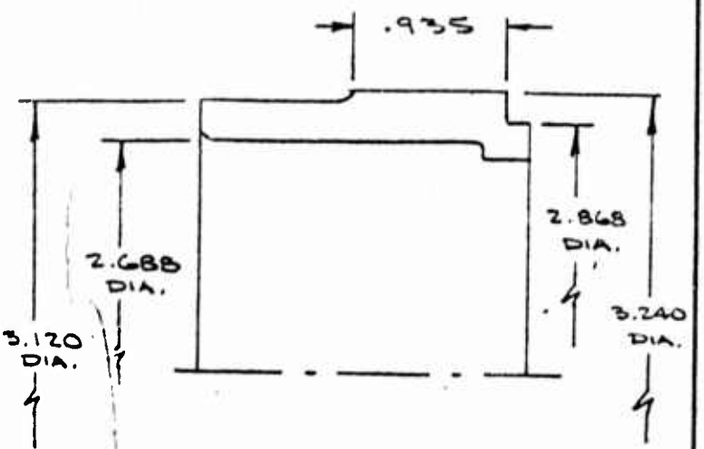

F_{br} = 121500 PSI (ASSUMED)

$A_{br} = .7854(3.120^2 - 2.688^2)$

$= 1.9711 \text{ IN.}^2$

$P_{AXIAL} = P_c \times .785(3.245^2 - 2.497^2)$ ◁2▷ ◁1▷

$= 1657 \times 3.373 = 5589$ #

$f_{br} = \frac{5589 \times 1.5}{1.971} = 4253$ PSI

$1.5 = \frac{12000}{4253} - 1 = \underline{1.82}$

$A_{br} = .7854(3.240^2 - 2.868^2) = 1.784 \text{ IN.}^2$

$f_{br} = \frac{5589 \times 1.5}{1.784} = 4699$ PS

$1.5 = \frac{12000}{4699} - 1 = \underline{1.55}$

◁2▷ REF. DWG 1511L104

◁1▷ REF. 285

CALC			REVISED	DATE	NOSE GEAR [illegible] NSA	1511L
CHECK					BEARING ANALYSIS	RYAN
APR					H. W. LOUD MACHINE WORKS, INC.	
APR					887 EAST SECOND ST., POMONA, CALIFORNIA	PAGE 290

BEARING ADAPTER – CONTD

$R_{DLB} = 14942\#$ (1)

$F_{br} = 12000 PSI$ (ASSUMED)

$A_{br} = 3.240 \times .935 = 3.029 IN.^2$

$$f_{br} = \frac{14942 \times 1.5}{3.029} = 7396 PSI$$

$$M.S. = \frac{12000}{7396} - 1 = .62$$

(1) REF. P. 145

CALC			REVISED	DATE	NOSE GEAR XV5A	1511L
CHECK					BEARING ANALYSIS	RYAN
APR					H. W. LOUD MACHINE WORKS, INC. 887 EAST SECOND ST., POMONA, CALIFORNIA	PAGE 291
APR						

ORIFICE SUPPORT TUBE (1511L126)

FIG. XIII

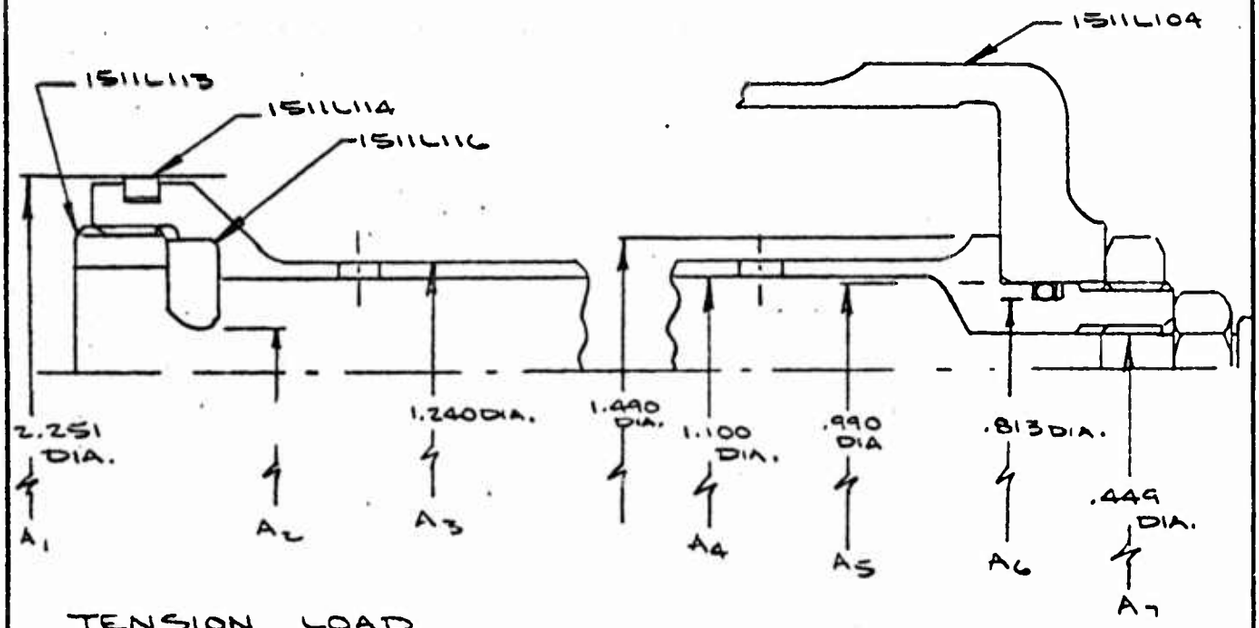

TENSION LOAD

1. ASSUME GEAR ACCELERATED DOWNWARD WITH FULLY COMPRESSED AIR PRESSURE (1672 PSIA) = 1657 PSIG [1]

2. ASSUME EXTENDED AIR PRESSURE BELOW ORIFICE. (169 PSIA) = 154 PSIG [1]

$A_1 = 3.980$ IN.^{2}
$A_2 = .196$ IN.^{2}
$A_3 = 1.208$ IN.^{2}
$A_4 = .950$ IN.^{2}
$A_5 = .770$ IN.^{2}
$A_6 = .519$ IN.^{2}
$A_7 = .158$ IN.^{2}

$$P_t = (A_1 - A_6)(1657) - (A_1 - A_2)\,154 - (A_4 - A_2)\,1657$$

$$= (3.980 - .519)\,1657 - (3.980 - .196)\,154 - (.950 - .196)\,1657$$

$$= 5735 - 583 - 1249$$

$$= 3903\ \#$$

[1] REF. P. 285 & 286.

CALC			REVISED	DATE
CHECK				
APR				
APR				

NOSE GEAR XV5A — 1511L

ORIFICE SUPPORT — RYAN

H. W. LOUD MACHINE WORKS, INC.
607 EAST SECOND ST., POMONA, CALIFORNIA

ORIFICE SUPPORT TUBE - CONT'D

$A_t = (A_3 - A_4) = 1.208 - .950 = .258 \text{ IN.}^2$

$A_{\text{BYPASS HOLES}} = 2\pi dt = 2 \times 3.14 \times .255 \times \frac{1.240 - 1.100}{2}$ (.140)

$= .112$

$A_{e_t} = .258 - .112 = .146 \text{ IN.}^2$

$f_{tu} = \frac{3903 \times 1.5}{.146} = 40099 \text{ PSI}$

$M.S. = \frac{70000}{40099} - 1 = \underline{.75}$

CROSS SECTION UNDER SEAL

$A_t = A_6 - A_7 = .519 - .158 = .361 \text{ IN.}^2$

$f_{tu} = \frac{3903 \times 1.5}{.361} = 16218 \text{ PSI}$

$M.S. = \frac{70000}{16218} = \underline{+L6E}$

THD'S IN SHEAR 1.00-14 NS-3THD

P.D. = .9536/.9494

$L_e = .240$

$A_s = \frac{.9494 \times 3.14 \times .240}{2} = .357 \text{ IN.}^2$

$f_{su} = \frac{3903 \times 1.5}{.357} = 16400 \text{ PSI}$

$M.S. = \frac{38000}{16400} - 1 = \underline{1.32}$

CALC	Bartlett		REVISED	DATE
CHECK				
APR				
APR				

NOSE GEAR XV5A — 1511L

ORIFICE SUPPORT — RYAN

H. W. LOUD MACHINE WORKS, INC.
857 EAST SECOND ST., POMONA, CALIFORNIA

ORIFICE SUPPORT TUBE - CONT'D

BEARING OF 1.490 DIA. ON CYL. (IN COMPRESSION)

1.490 DIA = 1.744 IN.^{2} (TUBE O.D.)

1.040 DIA = .849 IN.^{2} (CHAMFER DIA.)

ΔA = .895 IN.^{2}

VTOL MAX. (AFT) VERTICAL CRITICAL

V_o = 8448 # [1] F_{br} = 85000

$$f_{br} = \frac{8448 \times 1.5}{.895} = 14159 \text{ PSI}$$

$$M.S. = \frac{85000}{14159} - 1 = \underline{+\text{LGE}}$$

COLUMN IN / COMPRESSION

L = 11.380 IN. ASSUME FIXED ENDS C=4

O.D. = 1.240	1.208		.1161
I.D. = 1.100	.950		.0719
2t = .140	A = .258 IN.^{2}		I = .0442 IN.^{4}
t = .070			

$L' = L/\sqrt{C} = 11.380/2 = 5.690$

$\rho = \sqrt{I/A} = \sqrt{\frac{.0442}{.258}} = .414$ [2]

$L'/\rho = 5.690/.414 = 13.74$

$$F_{co} = F_{cy}\left[1 + \frac{F_{cy}}{200000}\right] = 50000\left[1 + \frac{50000}{200000}\right] = 62500 \text{ PSI}$$

[1] REF. P. 30 [2] REF. 2 P. 141

CALC	Exhibit		REVISED	DATE	NOSE GEAR XV5A	1511L
CHECK					ORIFICE SUPPORT	RYAN
APR					H. W. LOUD MACHINE WORKS, INC. 887 EAST SECOND ST., POMONA, CALIFORNIA	PAGE 294
APR						

ORIFICE SUPPORT TUBE - CONTD

TRANSITIONAL $L'/\rho = 1.732\pi\sqrt{E/F_{co}}$

$= 1.732 \times 3.14 \times \left[10.5 \times 10^6 / 6.25 \times 10^4\right]^{1/2}$

$= 5.438 \times 12.98$

$= 70.59$

USE SHORT COLUMN EQU. 1.3.8.5

$F_c = F_{co}\left[1 - .385\,(L'/\rho)/\pi\sqrt{E/F_{co}}\,\right]$

$= 62500\left[1 - .385(13.74)/3.14\,(12.98)\right]$

$= 62500 \times .870 = 54375$ PSI

$P_{COLUMN} = 8448\#$

$F_c = 50000$ PSI [1]

$A = .258$

ASSUME .021 ECCENTRICITY

$$f_c = \left[\frac{.021 \times 8448 \times .620}{.0442} + \frac{8448}{.258}\right] 1.5 = 52848 \text{ PSI}$$

$$M.S. = \frac{54375}{52848} - 1 = \underline{.03}$$

[1] REF. 2 P. 82

CALC	T. Woodruff		REVISED	DATE	NOSE GEAR XV5A	1511L
CHECK					ORIFICE SUPPORT	RYAN
APR					H. W. LOUD MACHINE WORKS, INC. 887 EAST SECOND ST., POMONA, CALIFORNIA	PAGE 295
APR						

ORIFICE SUPPORT TUBE - CONT'D

SHEAR OF 1.625-18 NEF-3B THD DUE TO LOAD ON ORIFICE 1511L116

P.D. = 1.5889 / 1.5937

$P_{ORIFICE} = (1657 - 154) .7854 (1.498^2 - .500^2)$

$= 2354\#$

$A_S = \frac{3.14 \times 1.5889 \times .325}{2} = .810 \text{ IN.}^2$

$f_{SU} = \frac{2354 \times 1.5}{.810} = 4360 \text{ PSI}$

$M.S. = \frac{38000}{4360} - 1 = \underline{\underline{+LGE}}$

SHEAR OF .500-20 UNF-3B THD

P.D. = .4675 / .4717

$P_{FILLER} = (1657 - 154) .7854 (.4675^2) = 259\#$

$A_S = \frac{3.14 \times .4675 \times .250}{2} = .183 \text{ IN.}^2$

$f_{SU} = \frac{259 \times 1.5}{.183} = 2123 \text{ PSI}$

$M.S. = \frac{38000}{2123} - 1 = \underline{\underline{+LGE}}$

CALC	[signature]		REVISED	DATE	NOSE GEAR XV5A	1511L
CHECK					ORIFICE SUPPORT	RYAN
APR					H. W. LOUD MACHINE WORKS, INC. 887 EAST SECOND ST., POMONA, CALIFORNIA	PAGE 296
APR						

GLAND NUT (1511L127)

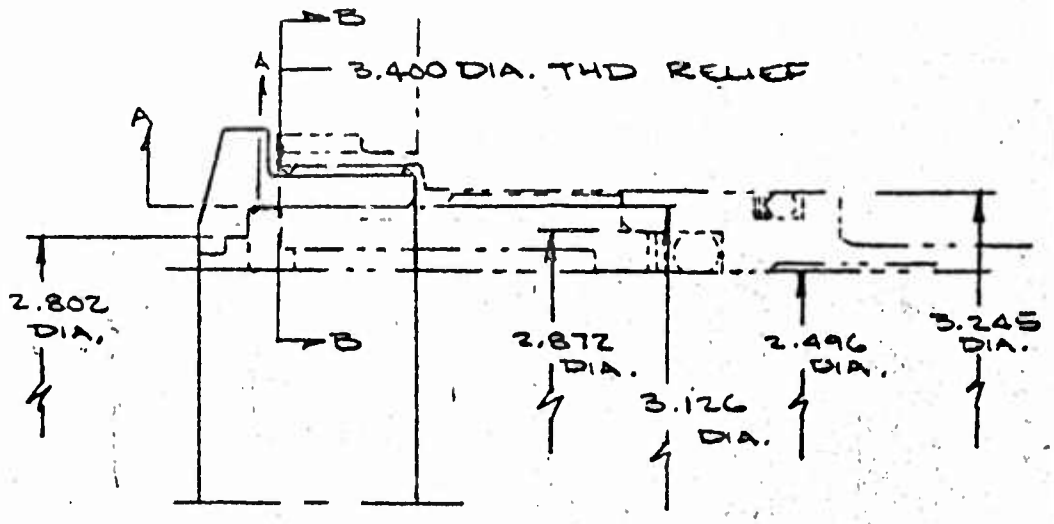

ASSUME MAX. PRESS. LOAD ACTS ON PISTON SEAL:

PRESS. = 1657 PSIG (1)

$P_{SEAL} = 1657 \times .7854(3.245^2 - 2.872^2) = 1657 \times 1.792$

$= 2969\#$

$P_{BEARING} = 1657 \times .7854(2.872^2 - 2.496^2) = 1657 \times 1.585$

$= 2626\#$

$P_{AXIAL} = 2969 + 2626 = 5595\#$

(1) REF. P. 285

CALC	Burchett		REVISED	DATE
CHECK				
APR				
APR				

NOSE GEAR XV5A — 1511L

GLAND NUT — RYAN

H. W. LOUD MACHINE WORKS, INC.
967 EAST SECOND ST., POMONA, CALIFORNIA

GLAND NUT - CONTD

SECTION A-A

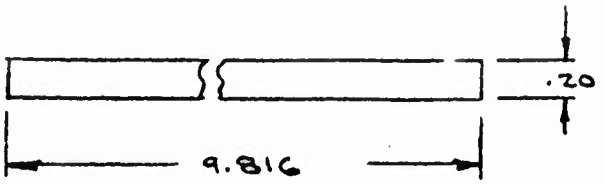

$A = .20 \times 9.816 \times .5 = .982 \text{ IN.}^2$ [1]

$Z = \frac{1}{6} \times .5 \times 3.14 \times 3.126 \times .20^2 = \frac{1}{12} \times 3.14 \times 3.126 \times .040$

$= .0327 \text{ IN.}^3$

$M_{a-a} = 595 \left(\frac{3.126 - 2.802}{2} \right) = 806 \text{ IN.\#}$ (.162)

K = 1.5

$F_{bu} = \left(\frac{70}{65} \right) 92000 = 99080 \text{ PSI}$ [1]

$f_{bu} = \frac{806 \times 1.5}{.0327} = 36973 \text{ PSI}$

$M.S. = \frac{99080}{36973} - 1 = \underline{1.68}$

$f_{su} = \frac{595 \times 1.5}{.982} = 8547 \text{ PSI}$

$M.S. = \frac{38000}{8547} - 1 = \underline{\underline{\overset{2.45}{+\text{LGE}}}}$

[1] REF. P. 313

CALC			REVISED	DATE
CHECK				
APR				
APR				

NOSE GEAR XV5A

GLAND NUT

H. W. LOUD MACHINE WORKS, INC.
307 EAST SECOND ST., POMONA, CALIFORNIA

1511L

RYAN

GLAND NUT - CONTD

SECTION B-B

$$M_{B-B} = 5595 \left(\frac{3.126 - 2.802}{2} + \frac{3.400 - 3.126}{2} \right)$$

$$= 1673 \text{ IN.\#}$$

$$Z = \frac{1}{6} \times 3.14 \times \frac{3.400 + 3.126}{2} \times \left(\frac{3.400 - 3.126}{2} \right)^2$$

$$= .032 \text{ IN.}^3$$

$$A_t = .7854(3.400^2 - 3.126^2) \times .5 = .702 \text{ IN.}^2$$

$$f_{bu} = \frac{1673 \times 1.5}{.032} = 78438 \text{ PSI} \qquad R_b = \frac{78438}{99080} = .792$$

$$f_{tu} = \frac{5595 \times 1.5}{.702} = 11955 \text{ PSI}$$

$$R_t = \frac{11955}{70000} - 1 = .171$$

$$M.S. = \frac{1}{.792 + .171} - 1 = .04$$

CALC	Gothic		REVISED	DATE	NOSE GEAR XV5A	1511L
CHECK					GLAND NUT	RYAN
APR					H. W. LOUD MACHINE WORKS, INC. 867 EAST SECOND ST., POMONA, CALIFORNIA	PAGE 299
APR						

PIN - METERING (1511L125)

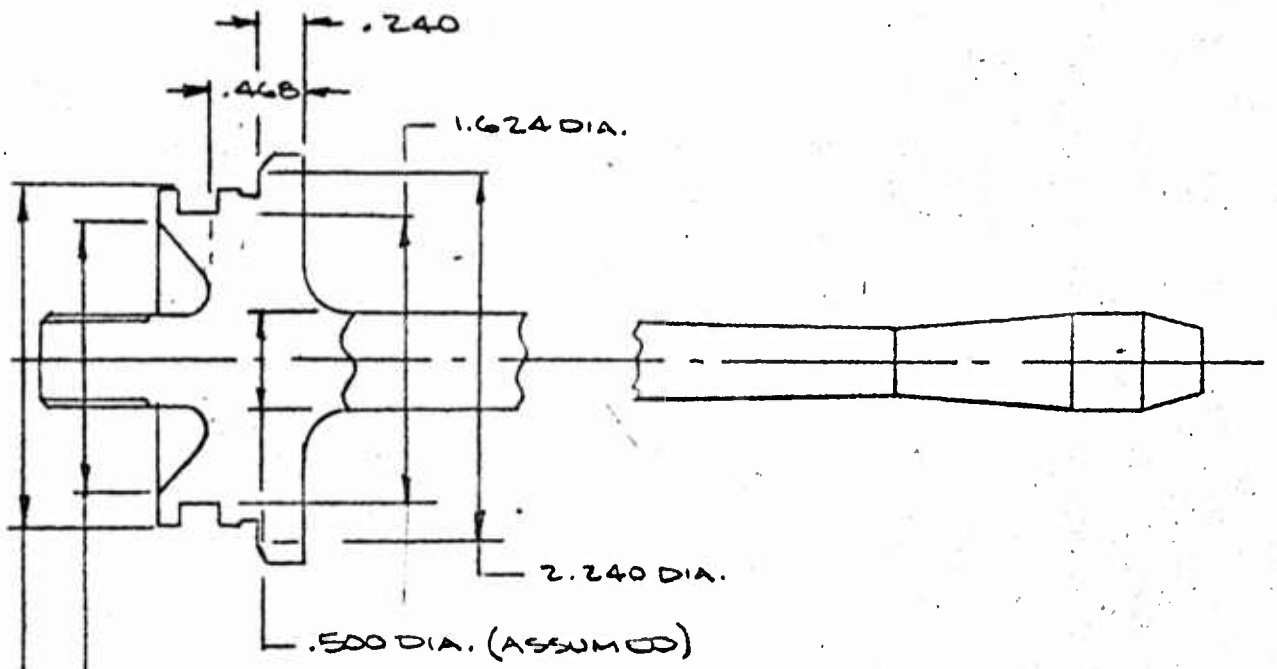

F_{br} = 85000 PSI ◁1

$A_s = 3.14 \times .500 \times .468 = .735$ IN.^{2}

$A_p = .7854 (.500)^2 = .196$ IN.^{2}

$P_s = 1657 \times .196 = 325$ #

$f_s = \frac{325 \times 1.5}{.735} = 663$ PSI. M.S. $= \frac{38000}{663} - 1 = \underline{+LGE}$

$A_{br} = .7854 (2.240^2 - 1.872^2) = 1.188$ IN.^{2}

$f_{br} = \frac{8448 \times 1.5}{1.188} = 10670$ PSI

M.S. $= \frac{85000}{10670} - 1 = \underline{+LGE}$

◁1 REF. 2 P. 82

CALC	C. Gottlieb		REVISED	DATE	NOSE GEAR XV5A	1511L
CHECK					PIN ANALYSIS	RYAN
APP.					H. W. LOUD MACHINE WORKS, INC. 887 EAST SECOND ST., POMONA, CALIFORNIA	PAGE 300
APR						

PIN-METERING CONT'D

TO DEVELOP 8448 # MAX. V_O, CONSIDER ORIFICE INITIALLY BLOCKED OFF BY METERING PIN.

$$\text{PRESS.} = \frac{8448 \times 1.5}{.7854(1.872^2 - .500^2)} = 4958 \text{ PSI}$$

$$f_s = \frac{4958 \times .196}{.735} = 1322 \text{ PSI}$$

$$\text{M.S.} = \frac{38000}{1322} - 1 = \underline{+\text{LGE}}$$

1.872 DIA. IN SHEAR

$A_s = 3.14 \times 1.872 \times .240 = 1.410 \text{ IN.}^2$

$A_p = .7854 \times 1.872^2 = 2.752 \text{ IN.}^2$

$P_s = 2.752 \times 1657 = 4560\#$

$$f_{su} = \frac{4560 \times 1.5}{1.410} = 4851 \text{ PSI}$$

$$\text{M.S.} = \frac{38000}{4851} - 1 = \underline{+\text{LGE}}$$

CALC	[signature]		REVISED	DATE
CHECK				
APR				
APR				

NOSE GEAR XY5A
PIN ANALYSIS

1511L
RYAN

H. W. LOUD MACHINE WORKS, INC.
887 EAST SECOND ST., POMONA, CALIFORNIA

PAGE 301

SECTION 10

RETRACTION ACTUATOR

1. CYLINDER ASSEMBLY (1511L303)

   MATL: 2024-T4 ALUM. ALLOY PER QQ-A-268/267

   F_{tu} = 62000 PSI

   F_{cy} = 40000 PSI ▷1

   F_{su} = 37000 PSI

2. PISTON (1511L302)

   MATL: 4140 STEEL PER MIL-S-5626

   F_{tu} = 125000 PSI ◁2

3. BEARING (1511L304)

   MATL: 2024 T4 ALUM. ALLOY PER QQ-A-268/267

   F_{tu} = 62000 PSI

   F_{cy} = 40000

   F_{su} = 37000 PSI ▷1

4. NUT (1511L305)

   MATL: 2024 T4 ALUM. ALLOY PER QQ-A-268/267

   F_{tu} = 62000 PSI

   F_{su} = 37000 PSI ▷1

▷1 REF. 2 P. 83 ◁2 REF. 2 P. 28

CALC			REVISED	DATE	NOSE GEAR XV5A	1511L
CHECK						RYAN
APR					H. W. LOUD MACHINE WORKS, INC. 307 EAST SECOND ST., POMONA, CALIFORNIA	PAGE 307
APR						

RETRACTION ACTUATOR (1511L300)

COLUMN ANALYSIS

FIG XIV

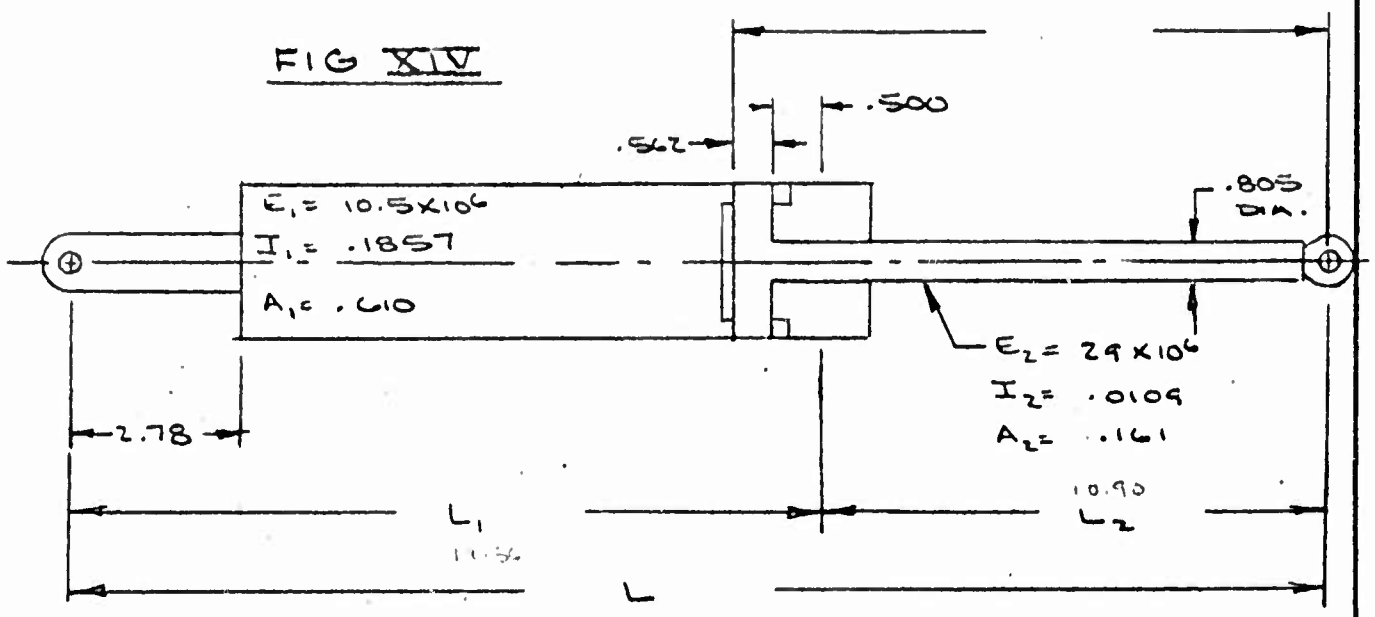

CYLINDER (1511L303)

O.D. = 1.680	2.216		.3910
I.D. = 1.430	1.606		.2053
2t = .250	A = .610 IN.²		I_2 = .1857 IN.⁴
t = .125			

PISTON (1511L302)

O.D. = .805	.509		.0206
I.D. = .666	.348		.0097
2t = .139	A = .161 IN.²		I = .0109 IN.⁴
t = .069			

OPERATING PRESSURE : 3000 PSI

PROOF PRESSURE : 4500 PSI

BURST PRESSURE : 7500 PSI

CALC	[illegible]		REVISED	DATE	NOSE GEAR XV5A RETRACTION ACTUATOR	1511L
CHECK						
APR						
APR					H. W. LOUD MACHINE WORKS, INC. 867 EAST SECOND ST., POMONA, CALIFORNIA	PAGE 303

RETRACTION ACTUATOR - CONT'D

COLUMN ANALYSIS - CONT'D

$P_c = 4500 \times .7854 (1.430)^2 = 7230\#$

$E_1 I_1 = 10.5 \times 10^6 \times .1857 = 1.950 \times 10^6$

$E_2 I_2 = 29 \times 10^6 \times .0109 = .3161 \times 10^6$

$L_1/L = \frac{12.56}{23.46} = .535 = a/L$

$E_2 I_2 / E_1 I_1 = .3161/1.950 = .1621$

$P_{CR}/P_E = .26$

$P_E = \pi^2 E_1 I_1 / L^2$

$= \frac{9.860 \times 1.950 \times 10^6}{550}$

$= 34944$

$\therefore P_{CR} = .26 \times 34944$

$= 9085\#$

$M.S. = \frac{9085}{7230} - 1 = \underline{.26}$

CALC	Barthel		REVISED	DATE
CHECK				
APR				
APR				

NOSE GEAR X-YSA

RETRACTION ACTUATOR

H. W. LOUD MACHINE WORKS, INC.
887 EAST SECOND ST., POMONA, CALIFORNIA

1511L

RYAN

PAGE 304

RETRACTION ACTUATOR - CONT'D

CYLINDER (1511L303) ANALYSIS

DIAMETRIC BREATHING AT 1.430 DIA. BORE

$t = .125$

$$R_M = \frac{1.680 + 1.430}{4} = .778$$

$$S_1 = \frac{PR_M}{2t} = \frac{4500 \times .778}{.250} = 14004$$

$$S_2 = \frac{PR_M}{t} = 14004 \times 2 = 28008$$

RADIAL DISPLACEMENT

$$\Delta R_M = \frac{R_M}{E}(S_2 - \nu S_1) \quad \triangleright 1$$

$$\Delta R_M = \frac{.778}{10.5 \times 10^6}\left[28008 - (.33 \times 14004)\right] \quad \triangleleft 2$$

$$= .074 \times 10^{-6}\left[23387\right]$$

$$= .0017$$

$$\Delta R_M / R_M = \frac{.0017}{.778} = .002$$

$\triangleleft 2$ REF. 3 P. 356

$\triangleright 1$ REF. 3 P. 258 CASE I

CALC	Boutrik		REVISED	DATE	NOSE GEAR XV5A	1511L
CHECK					RETRACTION ACTUATOR	RYAN
APR					H. W. LOUD MACHINE WORKS, INC. 887 EAST SECOND ST., POMONA, CALIFORNIA	PAGE 305
APR						

RETRACTION ACTUATOR

CYLINDER LUG ANALYSIS

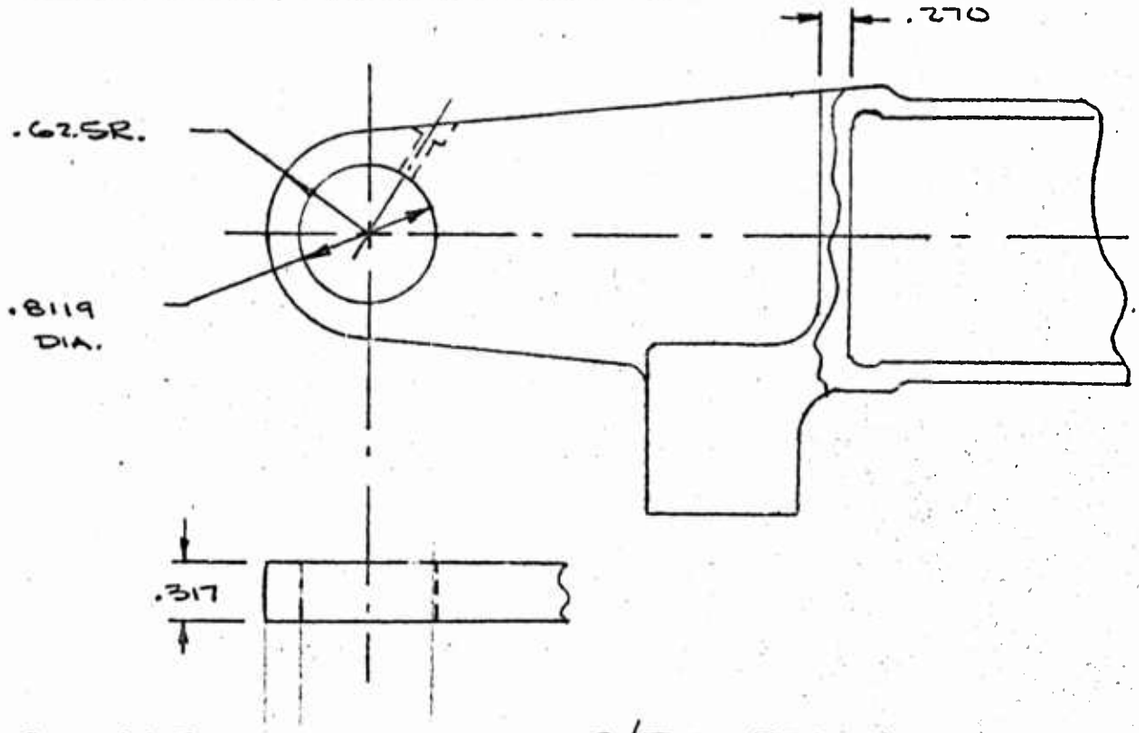

$a = .625$

$D = .812$

$W = 2(.625) = 1.250$

$W/D = 1.54$

$t = .317$

$a/D = .770$

$K_{br} = .48$ $\quad K_t = .95$

$A_{br} = .812 \times .317 = .257$

$A_t = (1.250 - .812) .317 = .139$

CALC			REVISED	DATE
CHECK				
APR				
APR				

NOSE GEAR XV5A — 1511L

RETRACTION ACTUATOR — RYAN

H. W. LOUD MACHINE WORKS, INC.
837 EAST SECOND ST., POMONA, CALIFORNIA

PAGE 306

RETRACTION ACTUATOR
CYLINDER LUG ANALYSIS - CONT'D

TENSION

$P_t = 4500 \times .7854 \times (1.430^2 - .805^2) = 4937\#$

$P'_{tu} = K_t F_{tu} A_t = .95 \times 62000 \times .139 = 8187\#$

$$M.S. = \frac{8187}{1.15 \times 4937} - 1 = \underline{.44}$$

SHEAR BRG

$P_{bru} = K_{br} F_{tux} A_{br} = .48 \times 50000 \times .257 = 6168\#$

$$M.S. = \frac{6168}{1.15 \times 4937} - 1 = \underline{.09}$$

LUG YIELD

$$\frac{P'_{u(MIN)}}{A_{br} F_{tu}} = \frac{6168}{.257 \times 62000} = .387 \quad \therefore C = 1.1$$

$$P'_y = C\left(\frac{F_{ty}}{F_{tu}}\right) P'_{u(MIN)} = 1.1\left(\frac{40}{62}\right) 6168 = 4376$$

$$\text{YIELD M.S.} = \frac{1.5 \times 4376}{1.15 \times 4937} - 1 = \underline{.16}$$

CALC	Burchit		REVISED	DATE	NOSE GEAR XV5A	1511L
CHECK					RETRACTION ACTUATOR	RYAN
APR					H. W. LOUD MACHINE WORKS, INC. 887 EAST SECOND ST., POMONA, CALIFORNIA	PAGE 307
APR						

RETRACTION ACTUATOR

CYLINDER - BULKHEAD.

$t = .270$ MIN.

$$t_{REQ'D} = .81\, R\sqrt{\frac{P}{F_{SU}}} = .81\left(\frac{1.470}{2}\right)\sqrt{\frac{7500}{37000}}$$

$$= .268 \text{ IN.}$$

$$M.S. = \frac{.270}{.268} - 1 = \underline{.007}$$

THDS IN SHEAR ON CYL. DUE TO PROOF PRESS.

THD = 1 7/8 - 16 UN-3A THD

P.D. = 1.8344/1.8304

l = .490 = ENGAGEMENT LENGTH

$A_S = .5 \times 3.14 \times 1.8304 \times .490 = 1.407 \text{ IN.}^2$

$$f_{SU} = \frac{7230}{1.407} = 5138 \text{ PSI}$$

$$M.S. = \frac{37000}{5138} - 1 = \underline{+\overset{7.20}{\text{LGE}}}$$

CALC	[illegible]		REVISED	DATE	NOSE GEAR XV5A	1511L
CHECK					RETRACTION ACTUATOR	RYAN
APR					H. W. LOUD MACHINE WORKS, INC. 887 EAST SECOND ST., POMONA, CALIFORNIA	PAGE 308
APR						

RETRACTION ACTUATOR

PISTON (1511L302) ANALYSIS

LOAD DUE TO PRESSURE:

$P_p = 4500 \times .7854 (1.430)^2 = 7230\#$

PISTON (1511L302) RELIEF DIA. = .795 IN.

$A_t = .7854(.795^2 - .666^2) = .148 \text{ IN}^2$

$f_t = \frac{7230}{.148} = 48850 \text{ PSI}$

$M.S. = \frac{125000}{48850} - 1 = \underline{1.56}$

HOOP COMPRESSION (RELIEF DIA.)

O.D. = .795

I.D. = .666

$2t = .129$

$t = .064$

$Dm = .730$

$2t/Dm > 1/10$

$l > 4.90 r \sqrt{\frac{r}{t}}$

$4.90(.397)\sqrt{\frac{.397}{.064}} = 4.84$

$f' = 1/4 \frac{E}{1-\nu^2} \frac{t^3}{r^3}$ [1]

$f' = \frac{.25 \times 29 \times 10^6 \times .00026}{.890 \times .0626} = 33800 \text{ PSI}$

$M.S. = \frac{33800}{4500} - 1 = \underline{+LGE}$

[1] REF. 3 P. 306 CASE 30

CALC	Burchill		REVISED	DATE	NOSE GEAR XV5A	1511L
CHECK					RETRACTION ACTUATOR	RYAN
APR					H. W. LOUD MACHINE WORKS, INC. 887 EAST SECOND ST., POMONA, CALIFORNIA	PAGE 309
APR						

RETRACTION ACTUATOR

BEARING (1511L304)

$P_{AXIAL} = 7230\#$ ▷1

$F_{br} = 12000$ PSI (ASSUMED)

$A_{br} = .7854(1.315^2 - .900^2) = .722$ IN.^{2}

$f_{br} = \frac{7230}{.722} = 10014$ PSI

$$M.S. = \frac{12000}{10014} - 1 = \underline{.20}$$

$A_s = 3.14 \times 1.390 \times .096 = .375$ IN.^{2}

$f_{su} = \frac{7230}{.375} = 19280$ PSI

$$M.S. = \frac{37000}{19280} - 1 = \underline{.92}$$

ASSUME $e = .125$

THEN:

$\Sigma M_L = .125 \times 7230 - .741\, R_{DU} = 0$

$R_{DU} = \frac{.125 \times 7230}{.741} = 1220\#$

$R_{DL} = 1220\#$

▷1 REF. P. 304

$F_{br} = 6000$ PSI

$L_e = 1.100 - .04 - .235 - .190 - .124 = .511$

$A_{br} = .511 \times .814 = .416$ IN.^{2}

$f_{br} = \frac{1220}{.416} = 2932$ PSI

$$M.S. = \frac{6000}{2932} - 1 = \underline{1.04}$$

CALC			REVISED	DATE	NOSE GEAR XV5A	1511L
CHECK					RETRACTION ACTUATOR	RYAN
APR					H. W. LOUD MACHINE WORKS, INC. 807 EAST SECOND ST., POMONA, CALIFORNIA	PAGE 310
APR						

RETRACTION ACTUATOR

NUT (1511L305)

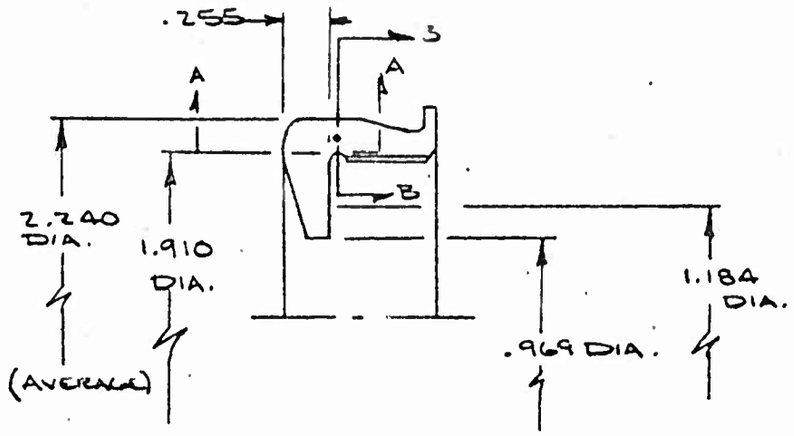

SECTION A-A

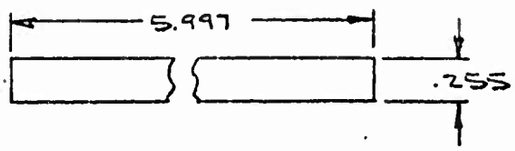

$l = 1.910\pi = 5.997$ IN.

$A = 5.997 \times .255 = 1.529$ IN.^{2}

$Z = \frac{1}{6} \times .5 \times 3.14 \times 1.910 \times .255^2 = .032$ IN.^{3}

$F_b = \left(\frac{62}{65}\right) 95000 = 87668$ [1]

$M_{a-a} = 7230\left(\frac{1.910 - 1.184}{2}\right) = 2624$ IN.#

$f_{b_u} = \frac{2624}{.032} = 82000$ PSI

$M.S. = \frac{87668}{82000} - 1 = \underline{\underline{.07}}$

[1] REF. P. 313

CALC	Bradrit		REVISED	DATE	NOSE GEAR XV5A	1511L
CHECK					RETRACTION ACTUATOR	RYAN
APR					H. W. LOUD MACHINE WORKS, INC. 887 EAST SECOND ST., POMONA, CALIFORNIA	PAGE 311
APR						

RETRACTION ACTUATOR

NUT (1511L305) CONT'D

$$f_{su} = \frac{7230}{1.529} = 4730 \text{ PSI}$$

$$M.S. = \frac{37000}{4730} - 1 = +\underline{\underline{LGE}}$$

SECTION B-B

$$A = .7854\left(2.250^2 - 1.910^2\right).5 = .555 \text{ IN.}^2$$

$$M_{B-B} = 7230\left[\left(\frac{1.910 - 1.184}{2}\right) + \left(\frac{2.250 - 1.910}{2}\right)\right]$$

$$= 7230 \times .533 = 3854 \text{ IN.\#}$$

$$Z = \frac{1}{6} \times 3.14 \times \frac{2.250 + 1.910}{2} \times \frac{2.250 - 1.910}{2}$$

$$= .185 \text{ IN.}^3$$

$$f_b = \frac{3854}{.185} = 20832 \text{ PSI} \qquad R_b = \frac{20832}{87768} = .237$$

$$f_t = \frac{7230}{.555} = 13030 \text{ PSI} \qquad R_t = \frac{13030}{62000} = .210$$

$$M.S. = \frac{1}{.237 + .210} - 1 = \underline{\underline{1.24}}$$

CALC	[signature]		REVISED	DATE	NOSE GEAR XV5A	1511L
CHECK					RETRACTION ACTUATOR	RYAN
APR					H. W. LOUD MACHINE WORKS, INC.	PAGE
APR					837 EAST SECOND ST., POMONA, CALIFORNIA	312

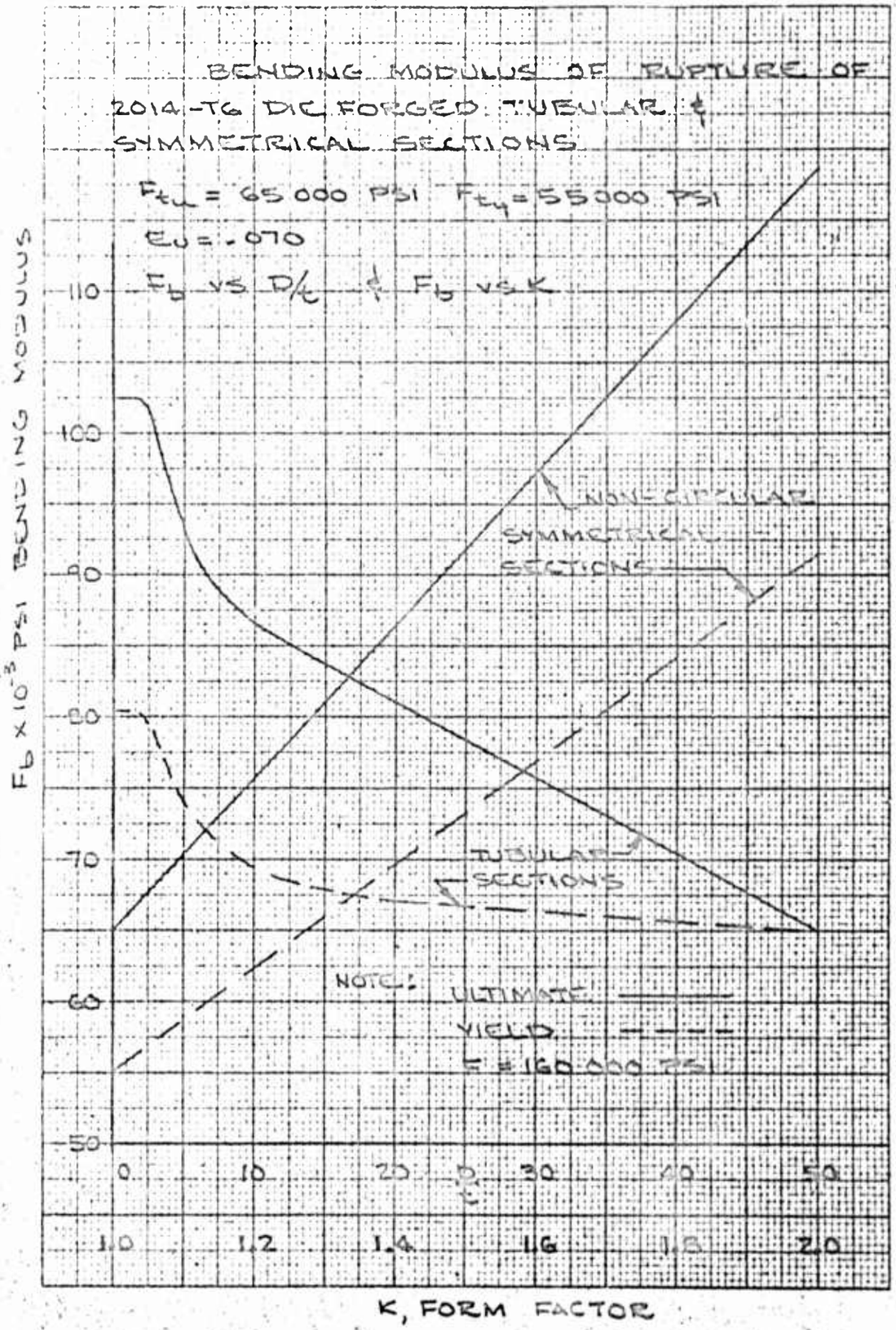
BENDING MODULUS OF RUPTURE OF
2014-T6 DIE FORGED TUBULAR &
SYMMETRICAL SECTIONS
F_{tu} = 65 000 PSI F_{ty} = 55000 PSI
E_c = .070
F_b vs D/t & F_b vs K
$F_b \times 10^{-3}$ PSI BENDING MODULUS
110
100
90
80
70
60
50
NON-CIRCULAR SYMMETRICAL SECTIONS
TUBULAR SECTIONS
NOTE: ULTIMATE
YIELD
F = 160 000 PSI
0
10
20
30
40
50
D/t
1.0
1.2
1.4
1.6
1.8
2.0
K, FORM FACTOR

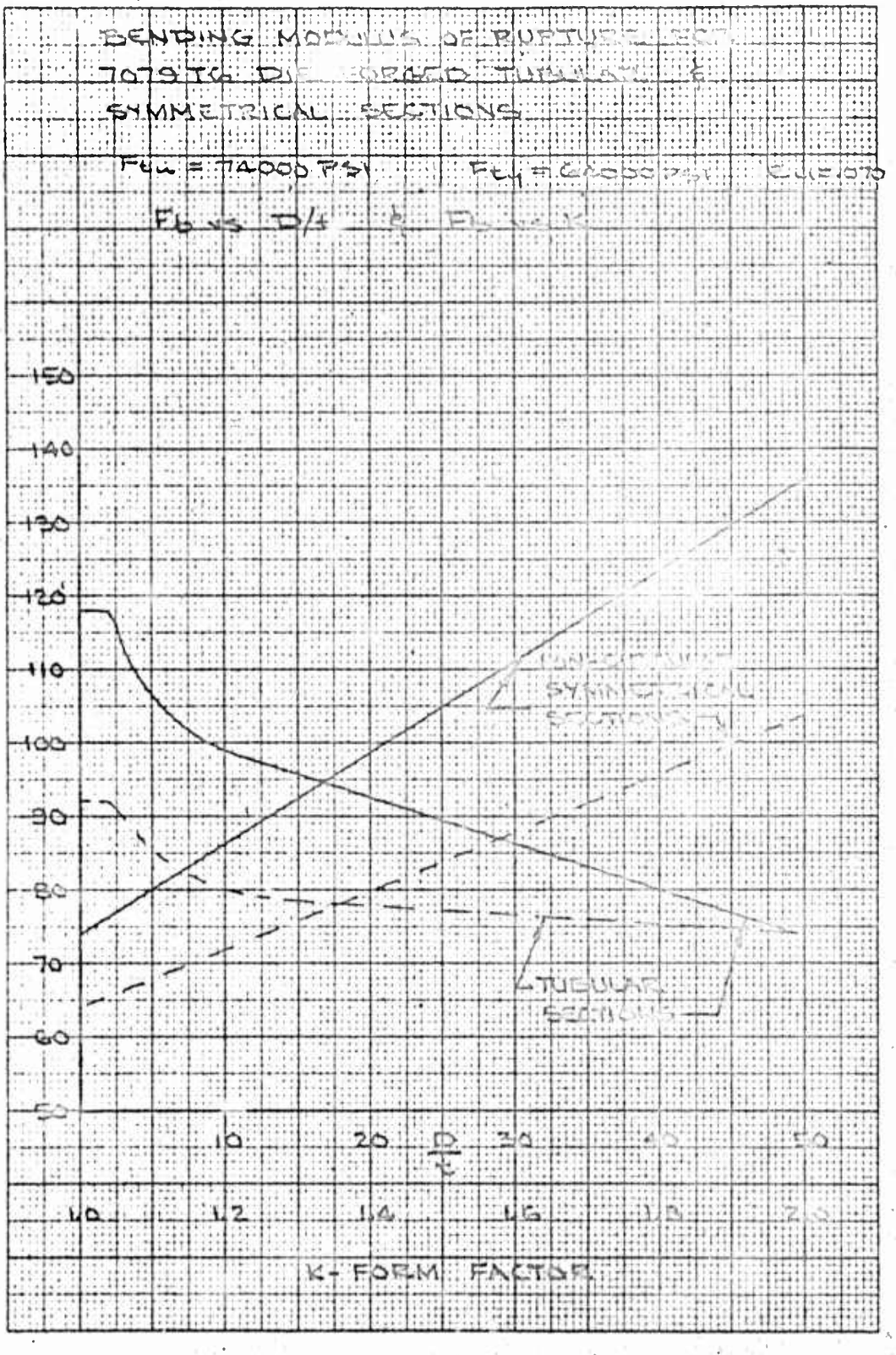
BENDING MODULUS OF RUPTURE
SYMMETRICAL SECTIONS
F_{tu} = 74000 PSI
F_{ty} = 64000 PSI
F_b vs D/t
$F_b \times 10^{-3}$ PSI BENDING MODULUS
150
140
130
120
110
100
90
80
70
60
50
SYMMETRICAL SECTIONS
TUBULAR SECTIONS
10
20
D/t
30
40
50
1.0
1.2
1.4
1.6
1.8
2.0
K- FORM FACTOR

CLEARPRINT CHARTS

$F_b \times 10^{-3}$ PSI BENDING MODULUS OF RUPTURE

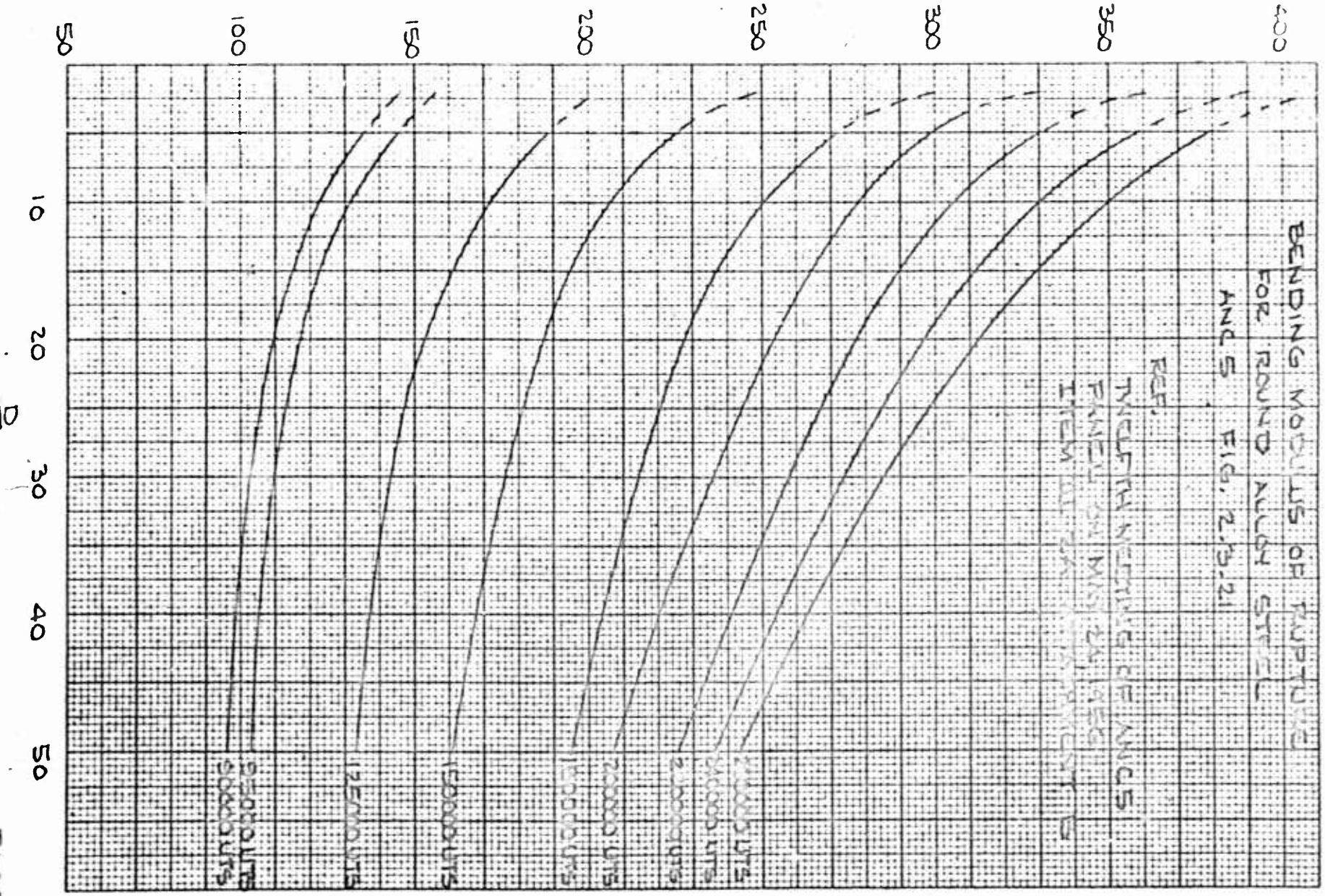

±10

BENDING MODULUS OF RUPTURE FOR STEEL TUBING & OTHER SYMMETRICAL SECTIONS

$F_{tu} = 180000$ PSI

$F_{ty} = 163000$ PSI

$E = 29 \times 10^6$ PSI

F_b vs D/t & F_b vs K

REF.
TWELFTH MEETING OF ANCS PANEL ON MAY 24 1962 ITEM III 2A ATTACHMENT B

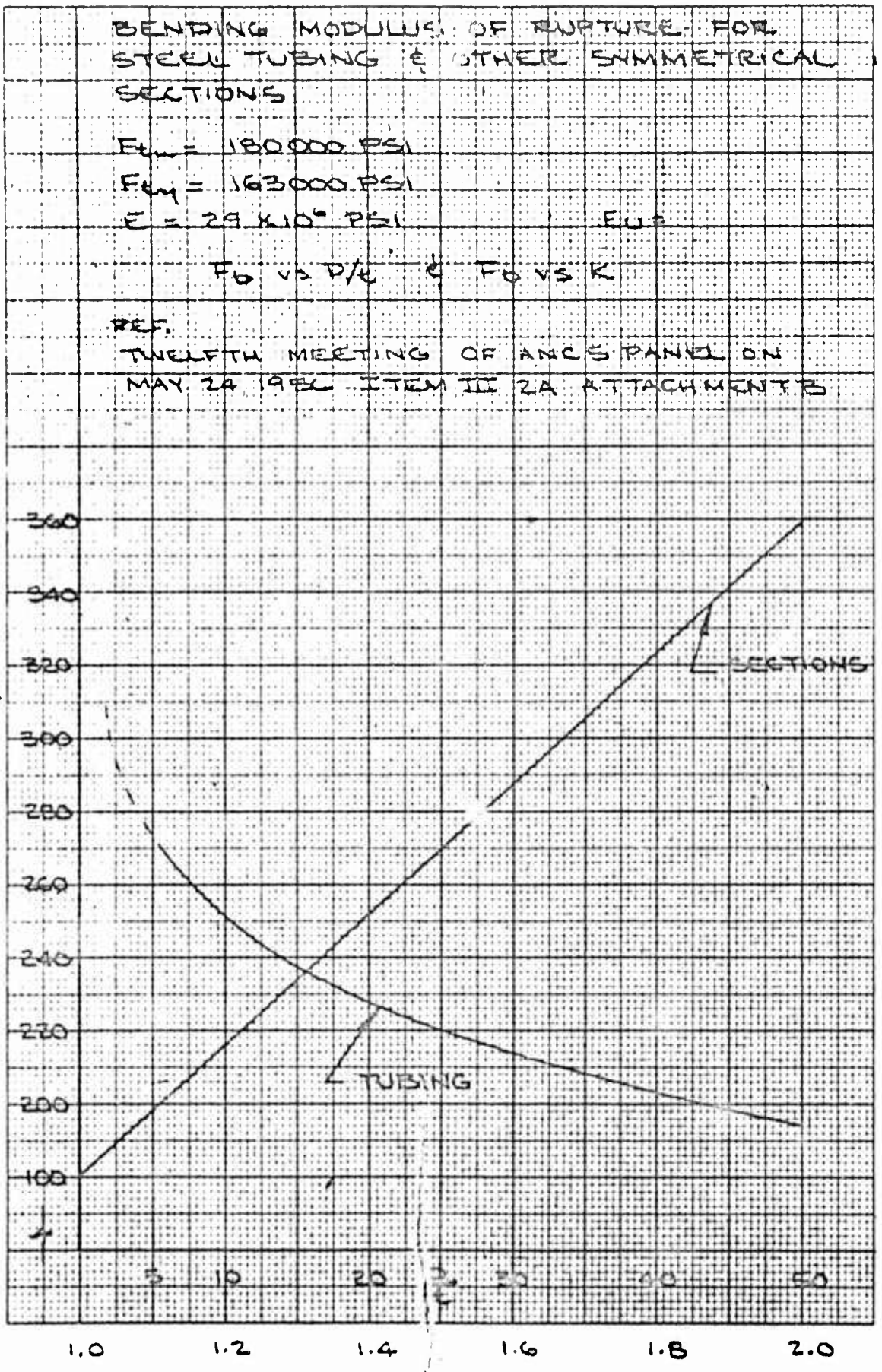

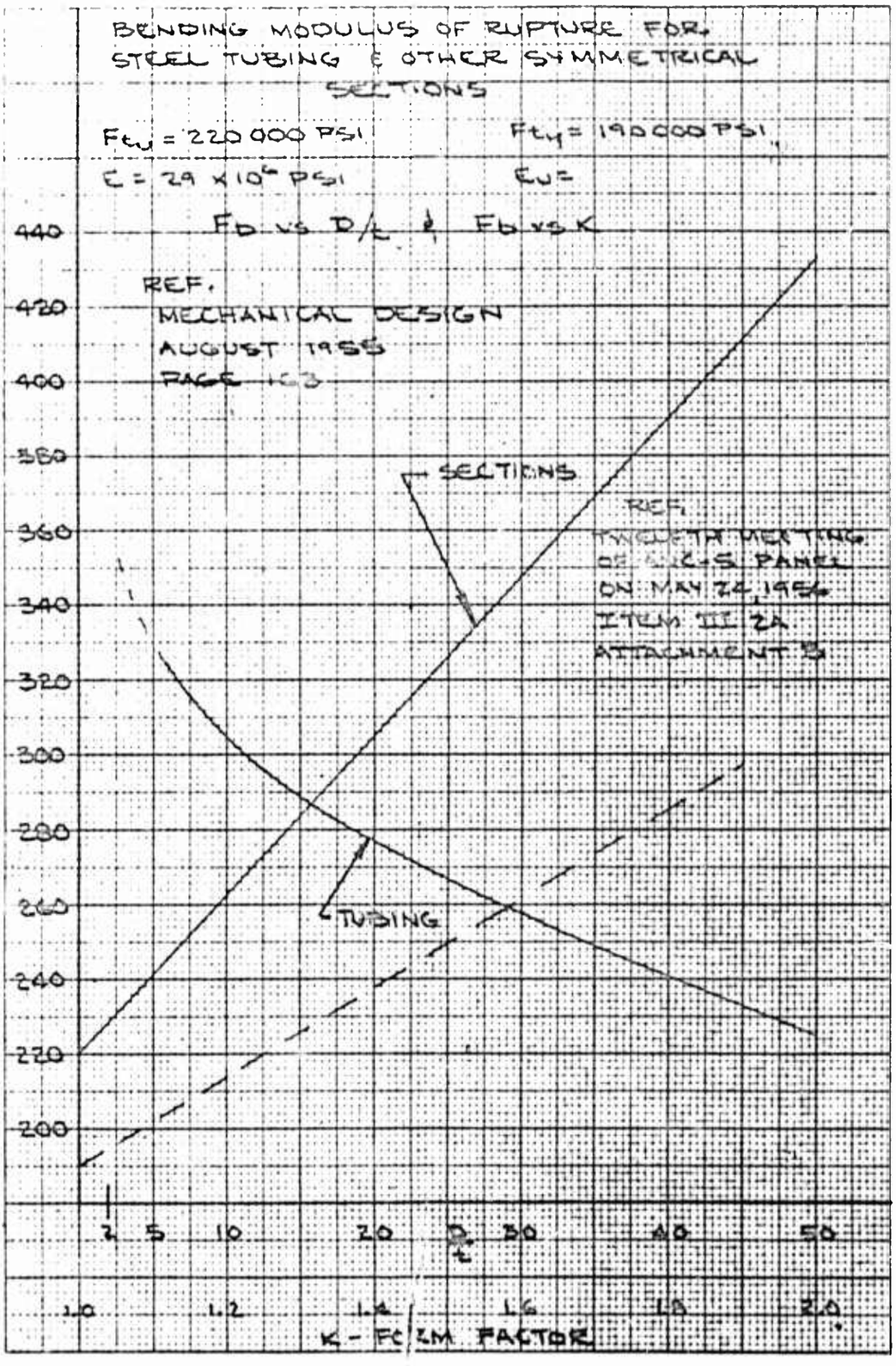
BENDING MODULUS OF RUPTURE FOR STEEL TUBING & OTHER SYMMETRICAL SECTIONS
Ftu = 220 000 PSI
Fty = 190 000 PSI
E = 29 x 10^6 PSI
Eu =
Fb vs D/t & Fb vs K
REF. MECHANICAL DESIGN AUGUST 1955 PAGE 163
SECTIONS
REF. TWELFTH MEETING OF ANC-5 PANEL ON MAY 24, 1956 ITEM III 2A ATTACHMENT B
TUBING
Fb x 10^-3 BENDING MODULUS
440
420
400
380
360
340
320
300
280
260
240
220
200
2
5
10
20
D/t
30
40
50
1.0
1.2
1.4
1.6
1.8
2.0
K - FORM FACTOR

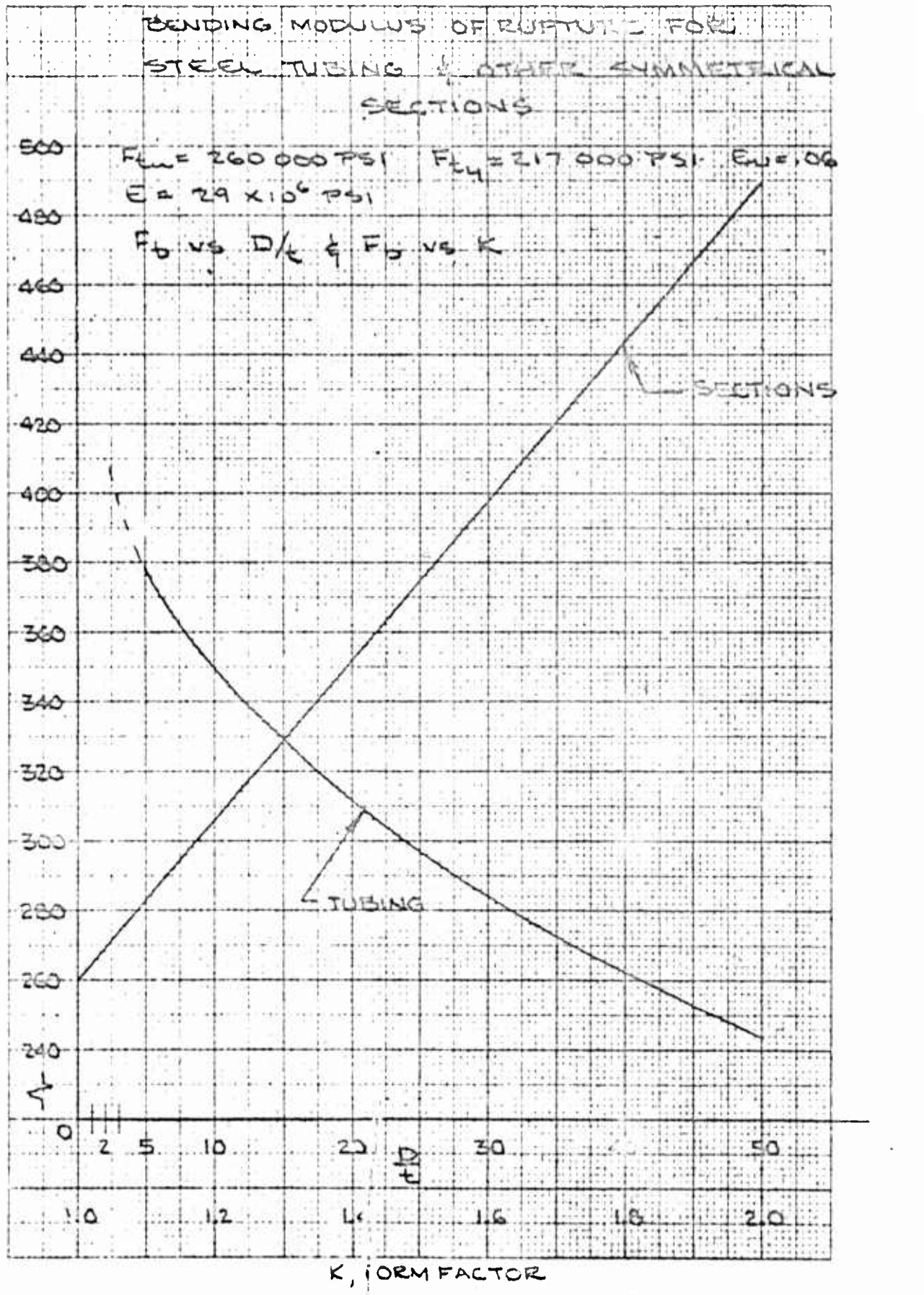
BENDING MODULUS OF RUPTURE FOR
STEEL TUBING & OTHER SYMMETRICAL
SECTIONS
F_{tu} = 260 000 PSI F_{ty} = 217 000 PSI Eu = .06
E = 29 x 10⁶ PSI
F_b vs D/t & F_b vs K
SECTIONS
TUBING
$F_b \times 10^{-3}$ PSI BENDING MODULUS
500
480
460
440
420
400
380
360
340
320
300
280
260
240
0
2
5
10
20
30
50
D/t
1.0
1.2
1.4
1.6
1.8
2.0
K, FORM FACTOR